High-Flow, Manual Gas Pressure Regulators

HF Series

- Compact size with flow rates up to 200 std L/min
- Maximum inlet pressures up to 500 psig (34.4 bar)
- Manually adjustable outlet pressure up to 150 psig (10.3 bar)
- 316L VIM-VAR stainless steel body for ultrahigh-purity applications
- 1/4 in. VCR® metal face seal, 1/4 in. tube butt weld, and modular surface-mount end connections

Swagelok®

Features

The Swagelok® HF series manual gas pressure regulator features a load spring which interacts with a unique pressure-sensing assembly to precisely control outlet pressure. Outlet pressure is adjusted by turning the handle.

Four interchangeable, color-coded load springs provide outlet pressures ranging from vacuum to 150 psig (10.3 bar). The load spring can be changed easily and safely without the potential of contaminating the high-purity system.

A matching label on top of the handle shows the pressure range of the installed spring. See the **Operating Range** table on page 3 for the outlet pressure range for each load spring.

Modular Surface-Mount Regulator Shown

Compact, High-Flow Design

- Allows close spacing of system components and process lines
- Modular surface-mount regulator is IGC™ compatible
- Offers flows up to 200 std L/min

Adjustable Outlet Pressure Ranges

- Available in outlet pressures ranging from vacuum to 150 psig (10.3 bar)
- Allow changing the range without affecting system integrity

Innovative, Pressure-Sensing Assembly

- Includes welded diaphragm and unique stem assembly
- Results in low droop, which eliminates the need for adjustment in many systems
- Allows maximum rated inlet pressure applied to the outlet without damage

High-Purity Design

- Achieved with tied poppet for positive shutoff and metal-to-metal seal to atmosphere
- Features 316L VIM-VAR stainless steel body internally electropolished and finished to 5 µin. (0.13 µm) R_a
- Available with a choice of Swagelok ultrahigh-purity processing **(P)** or Swagelok special processing **(P1)**

Self-Centering Poppet

- Minimizes creep
- Offered in PCTFE for leak-tight shutoff

Narrow-Profile Handle

- Permits easy access for pressure adjustments when system components and process lines are closely spaced.
- Designed with both a finger-tip grip and knurled diameter for positive actuation.

Technical Data

Pressure Rating psig (bar)		Temperature Rating °F (°C)		Supply-Pressure Effect (SPE)①	Flow Coefficient (C_v)	Flow Rate std L/min	Orifice Size in. (mm)	Internal Volume in.³ (cm³)
Inlet	Outlet	Operating	Bakeout					
Vacuum to 500 (34.4)	Vacuum to 150 (10.3)	–10 to 150 (–23 to 65)	302 (150)	1.6	0.2	200②	0.120 (3.0)	0.32 (5.2) with VCR end connections

① Defined as the ratio of the change in outlet pressure for every 100 psig change in the inlet pressure.
② With inlet pressure at 100 psig (6.8 bar) and outlet pressure at 30 psig (2.0 bar)

Process Specifications

See Swagelok specifications *Special Cleaning and Packaging (SC-11),* MS-06-63, and *Ultrahigh-Purity Process Specification (SC-01),* MS-06-61, for details on processes, process controls, and process verification.

Cleaning	Assembly and Packaging	Process Designator	Process Specification	Wetted Surface Roughness (R_a)	Testing
Ultrahigh-purity cleaning with a continuously monitored, deionized water, ultrasonic cleaning system	Performed in ISO Class 4 work areas; regulators are double bagged and vacuum sealed in cleanroom bags	P	*Ultrahigh-Purity Process Specification (SC-01)*	5 µin. (0.13 µm) average, machine finished and electropolished	Inboard helium leak tested to a rate of 1×10^{-9} std cm³/s
Special cleaning with non–ozone-depleting chemicals	Performed in specially cleaned areas; regulators are individually bagged	P1	*Special Cleaning and Packaging (SC-11)*		

Materials of Construction

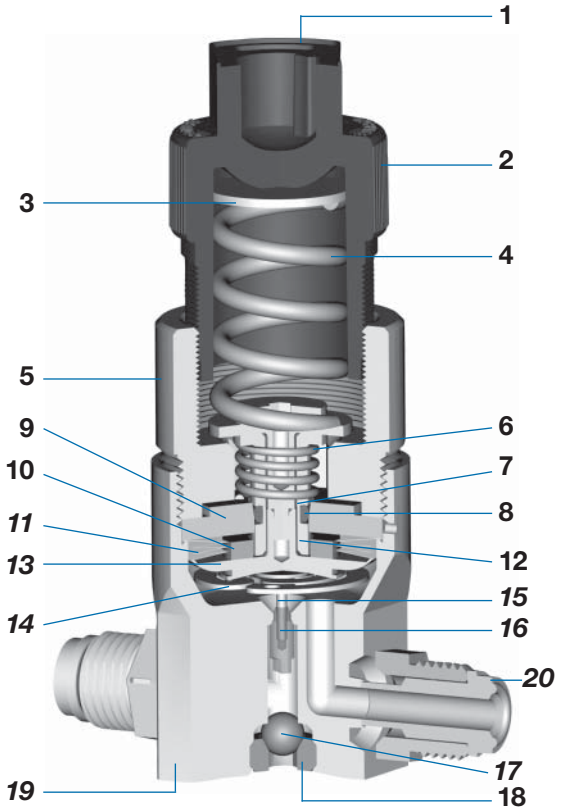

	Component	Material Grade/ASTM Specification
1	Label (not shown)	Aluminum
2	Standard handle	Blue nylon
	Optional handle	Aluminum 6061-T6/B211
3	Spring plate	S17400 SS/A564
4	Load spring	S17700 SS/A313
5	Bonnet nut	Silver-plated 316 SS/A479
6	Balance spring	S17700 SS/A313
7	Damper shaft	316 SS/A479
8	O-ring	Fluorocarbon FKM
9	Bonnet	S17400 SS/A564
10	Backup ring	Brass 360/B16
11	*Diaphragm*	*Alloy 625/AMS 5879*
12	O-ring catch	Brass 360/B16
13	*Face plate*	*316L SS VIM-VAR/A479*
14	*Poppet-retaining wafer*	*Alloy X-750/B637*
15	*Stem*	*316L SS/A479*
16	*Low-pressure poppet*	*PCTFE/AMS 3650*
17	*Poppet port seal*	*Alloy C-276/B574*
18	Poppet port plug	316 SS/A479
19	*Body*	*316L SS VIM-VAR/A479*
20	*Welded end connections*	*316L SS/A479 or 316L SS VIM-VAR/A479*

Wetted components listed in *italics.*

Operating Range

Load Spring Range at Maximum Inlet and Outlet Pressures

The operating range for each load spring includes the area below each line.

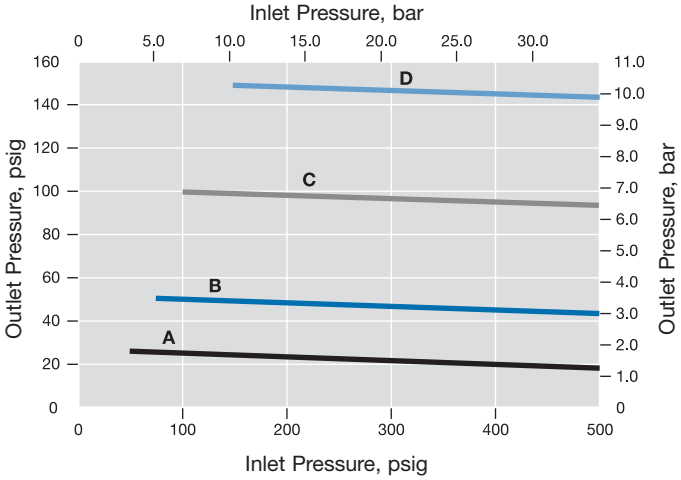

Load Spring	Outlet Pressure Range psig (bar)	Spring Color
A	Vacuum to 25 (1.7)	Red
B	5 to 50 (0.34 to 3.4)	White
C	10 to 100 (0.68 to 6.8)	Blue
D	20 to 150 (1.3 to 10.3)	Yellow

Flow Data

This graph illustrates the change or "droop" in four different outlet pressures as the flow rate increases and the inlet pressure decreases.

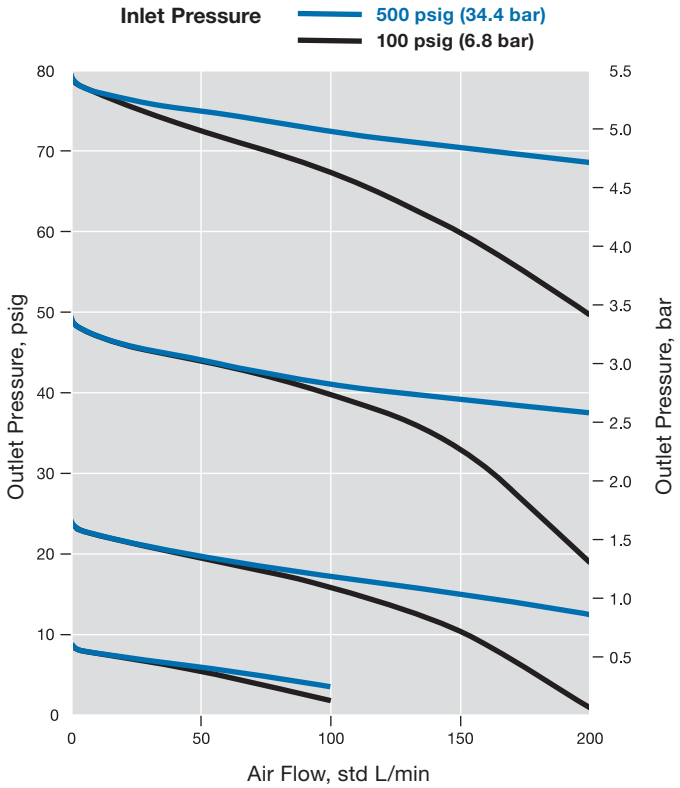

Dimensions

Dimensions, in inches (millimeters), are for reference only and are subject to change.

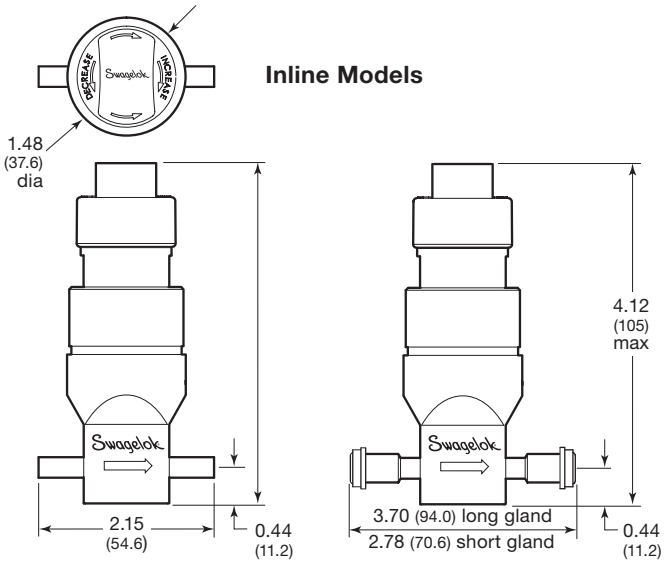

Inline Models

Butt Weld End Connections

VCR End Connections

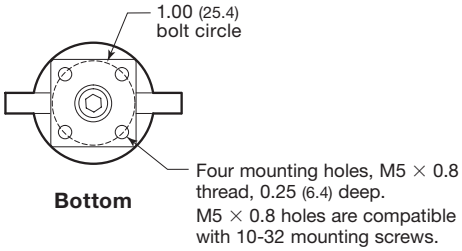

Bottom

Surface-Mount Model

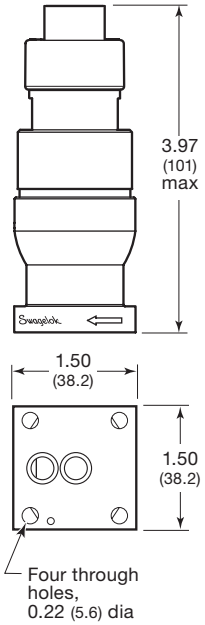

Bottom

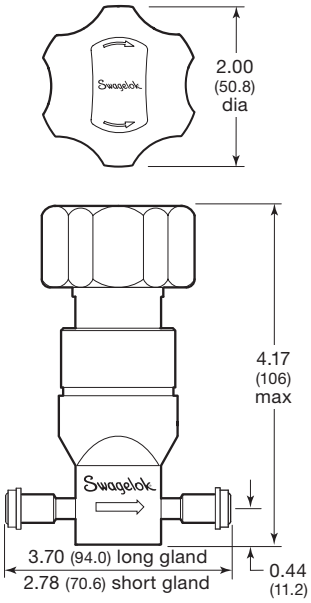

Inline Model with Optional Low-Torque Handle

Ordering Information

To order a complete assembly, order a regulator and a spring kit. Regulators are stocked with narrow-profile blue nylon handles and without spring kits.

SS – HFM3B – VCR4 – P

Body Material
316L VIM-VAR stainless steel

Model
HFM3B = inline
MSM-HFM3B = surface-mount

End Connections
VCR4 = 1/4 in. VCR **short** gland①
VCR4L = 1/4 in. VCR **long** gland①
BW4 = 1/4 in. tube butt weld
None = C-seal surface-mount (MSM-HFHM3B only)

① Swagelok VCR split-nut assemblies must be ordered separately. See below.

Process
P = Swagelok *Ultrahigh-Purity Process Specification (SC-01);* electropolished, R_a 5 µin. (0.13 µm) average
P1 = Swagelok *Special Cleaning and Packaging (SC-11);* electropolished, R_a 5 µin. (0.13 µm) average

Spring Kits

Spring kits include a load spring, spring plate, label, and installation instructions. To order, select the spring kit ordering number based on the desired outlet pressure range of the regulator.

Outlet Pressure Range psig (bar)	Spring Kit Ordering Number
Vacuum to 25 (1.7)	177-13K-HFM-A
5 to 50 (0.34 to 3.4)	177-13K-HFM-B
10 to 100 (0.68 to 6.8)	177-13K-HFM-C
20 to 150 (1.3 to 10.3)	177-13K-HFM-D①

① See **Low-Torque Handle,** page 6.

Swagelok VCR Split-Nut Assemblies

Swagelok VCR split-nut technology offers:

- Flexibility of inventory
- Shorter end-to-end dimensions
- Rotatable, nonwelded end connections.

When ordering a regulator with VCR end connections, VCR split-nut assemblies must be ordered separately. VCR split-nut assemblies are field assembled. To order, select the ordering number for the male or female assemblies.

Male split-nut assembly ordering number:
SS-4-VCR-4-SN

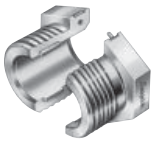

Female split-nut assembly ordering number:
SS-4-VCR-1-SN

Options and Accessories

Factory-Installed Load Springs

Regulators can be ordered with a *factory-installed* load spring. To order, add the spring designator to the regulator ordering number.

Example:
SS-HFM3B-VCR4-P-**A**

Outlet Pressure Range psig (bar)	Spring Designator
Vacuum to 25 (1.7)	-A
5 to 50 (0.34 to 3.4)	-B
10 to 100 (0.68 to 6.8)	-C
20 to 150 (1.3 to 10.3)	-D

Maintenance Kits

Poppet Kits

A poppet kit includes one poppet, poppet port seal, and installation instructions.

Ordering number: **MS-3K-HFM3**

Poppet Tool

A poppet replacement tool is needed for poppet installation.

Ordering number: **MS-TOOL-HFM3**

Aluminum Handles

Narrow-Profile Handle

The standard, narrow-profile handle is also available in aluminum with a choice of seven epoxy-coated colors.

To order a *factory-installed* narrow-profile aluminum handle on an HF series manual regulator, add the handle color designator to the regulator ordering number.

Example: SS-HFM3B-VCR4-P-**BK**

Handle Color	Designator
Black	-BK
Blue	-BL
Green	-GR
Orange	-OG
Red	-RD
White	-WH
Yellow	-YW

Low-Torque Handle

An optional six-lobed handle is available to provide a lower actuation torque on the HF series manual regulator. The low-torque handle is epoxy-coated aluminum and is available in seven colors.

The low-torque handle is suitable for use with the 20 to 150 psig (1.3 to 10.3 bar) spring kit. The handle has a diameter of 2.00 in. (50.8 mm), as shown on page 4, and is not recommended for use with surface-mount valves.

To order a *factory-installed* low-torque aluminum handle, insert **L** and add the color designator to the regulator ordering number as shown.

Example: SS-HFM**L**3B-VCR4-P-**BK**

Oxygen Service Hazards

For more information about hazards and risks of oxygen-enriched systems, see the Swagelok *Oxygen System Safety* technical report, MS-06-13.

Safe Product Selection
When selecting a product, the total system design must be considered to ensure safe, trouble-free performance. Function, material compatibility, adequate ratings, proper installation, operation, and maintenance are the responsibilities of the system designer and user.

Caution: Do not mix or interchange parts with those of other manufacturers.

Warranty Information

Swagelok products are backed by The Swagelok Limited Lifetime Warranty. For a copy, visit swagelok.com or contact your authorized Swagelok representative.

Printed in U.S.A., MI
July 2007, R3
MS-02-157