Ball Valves

General Purpose and Special Application

60 Series

- 1/8 to 2 in. and 6 to 25 mm sizes
- Stainless steel, carbon steel, brass, and special alloy materials
- On-off (2-way) and switching (3-way) valves
- Compensating seat design
- Live-loaded, two-piece stem packing

Swagelok

Contents

	Page
Features	2
Materials of Construction	4
Testing	5
Cleaning and Packaging	5
Pressure-Temperature Ratings	6
Ordering Information	8
Dimensions	
Swagelok® Tube Fitting End Connections	9
Female Pipe Thread End Connections	10
Tube and Pipe Socket Weld Connections	11
Pipe Butt Weld Connections	12
Tube Extension End Connections	13
VCO® and VCR® Face Seal Fitting End Connections	13
Sanitary Fitting End Connections	14
Mixed End Connections	14
Special Application Valves	
Steam	15
Thermal	16
Fire	17
Chlorine	18
All Welded	18
Low Temperature	19
Rapid-Cycle Service	19
Options	20
Rack and Pinion Pneumatic Actuators	22

Important Information About Packed Valves

- Packing adjustment may be required during the valve's service life.
- Swagelok ball valves are designed to be operated in a fully open or fully closed position.

Oxygen Service Hazards

For more information about hazards and risks of oxygen-enriched systems, see the Swagelok *Oxygen System Safety* technical report, MS-06-13.

Features

- Quarter-turn actuation
- Stainless steel, carbon steel, brass, and special alloys
- Lever, oval, extended oval, and locking handles
- Variety of end connections in 1/8 to 2 in. and 6 to 25 mm sizes
- Pneumatic and electric actuators
- Mounting brackets and couplings to enable mounting of ISO 5211 standard actuators
- Optional vent porting

On-Off (2-Way) Valve

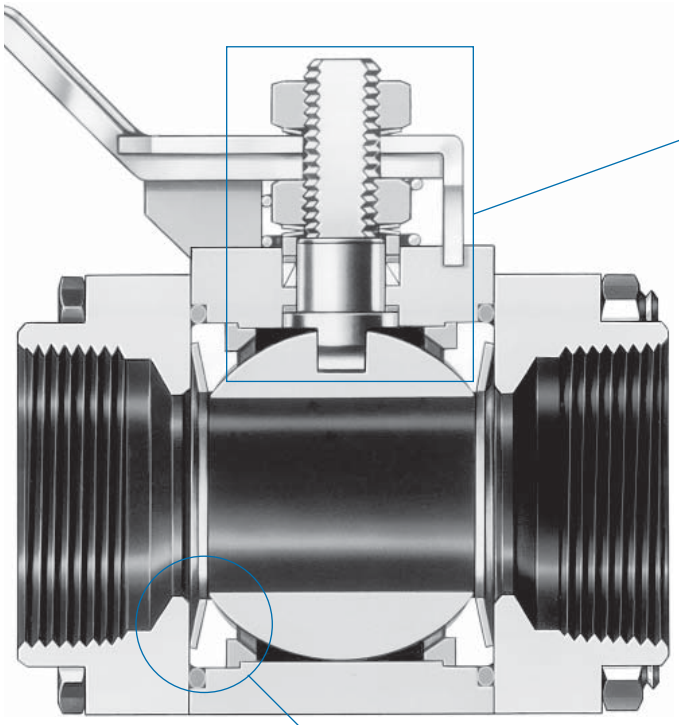

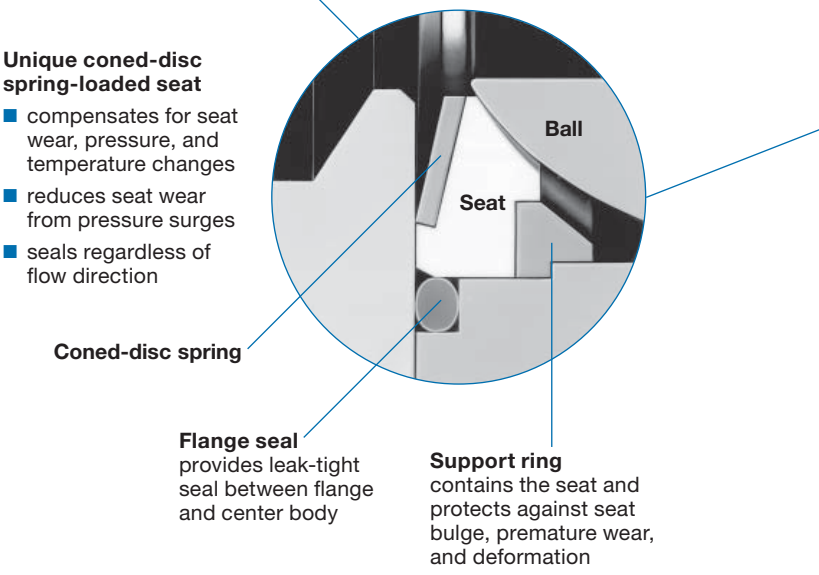

Unique coned-disc spring-loaded seat

- compensates for seat wear, pressure, and temperature changes
- reduces seat wear from pressure surges
- seals regardless of flow direction

Coned-disc spring

Flange seal provides leak-tight seal between flange and center body

Support ring contains the seat and protects against seat bulge, premature wear, and deformation

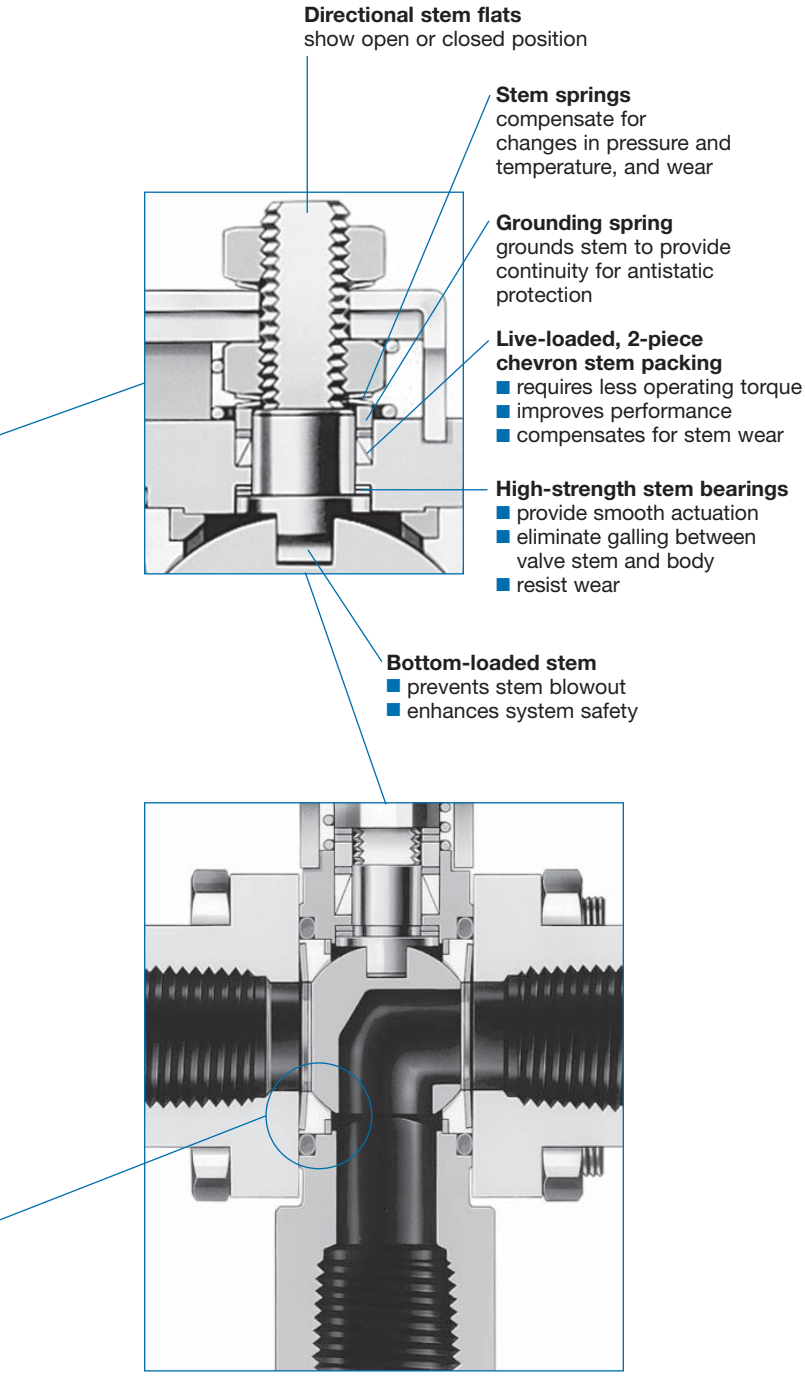

Switching (3-Way) Valve

All stainless steel switching ball valves incorporate many of the features of the on-off (2-way) design. The one-piece center body uses no welding and allows 180° actuation. The switching design allows the user to:

- divert flow from a common inlet to one of two outlets
- block flow from one inlet port and bleed out the opposite port.

Flexing seat design ensures leak-tight seal in both low- and high-pressure systems

Under low pressure, seals are created by the coned-disc spring-loaded seats pushing against the ball. Pressure is not required to create a seal.

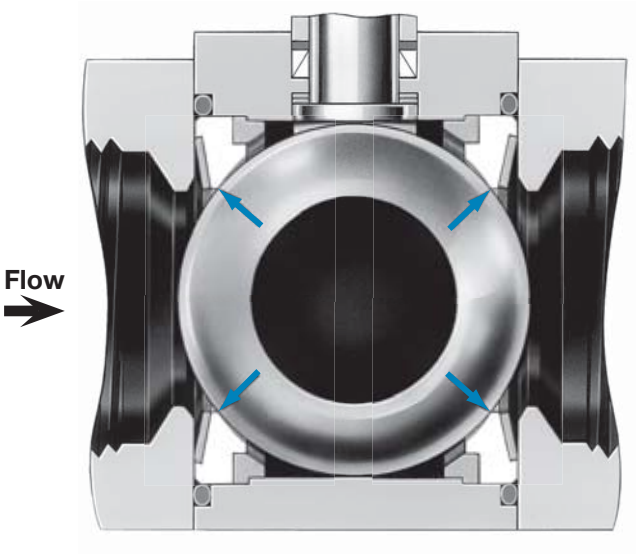

Under high pressure, the ball is forced downstream, flexing the downstream seat and creating a seal. The upstream seat also flexes with the ball movement and maintains a seal.

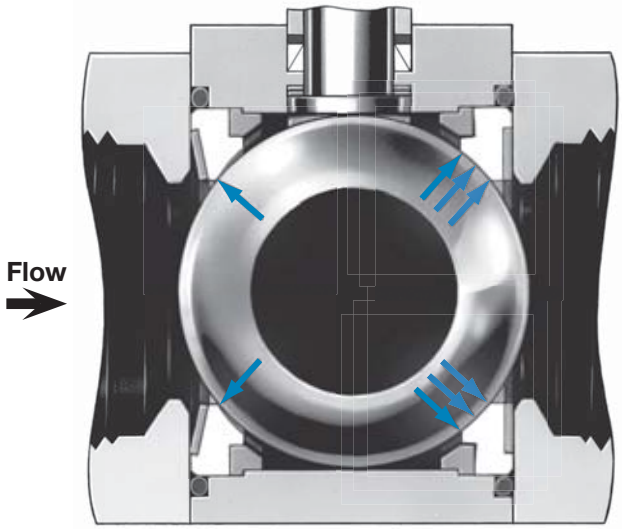

Materials of Construction

Component	Valve Body Materials①		
	Stainless Steel	Carbon Steel	Brass
	Material Grade/ASTM Specification		
1 Stem nut	316 SS	Low-alloy steel grade 7/A194	
2 Stem spring②	Strain-hardened 316 SS/A240		
3 Stop plate②	304 SS/A240 or 316 SS/A240		
4 Handle			
5 Handle sleeve	Vinyl		
6 Grounding spring	302 SS/A313		
7 Stem nut③	316 SS	Low-alloy steel grade 7/A194	
8 Stem springs (2)	Strain-hardened 316 SS/A240		
9 Gland	PTFE-coated 316 SS/B783		Brass CDA 360/B16
10 Packing support	Polyetheretherketone (PEEK)		
11 *Top packing*	*Reinforced PTFE④*		
12 *Bottom packing*			
13 *Body*	*316 SS/A479 or CF3M/A351 W60—316L SS/A479*	*WCB⑤/A216*	*Brass CDA 360/B16*
14 *Stem bearing(s)⑥*	*Alloy X-750/AMS 5542*		*PEEK*
15 *Stem*	*316 SS/A276 or A479*		
16 *Ball*	*316 SS/A276*		*62 series—316 SS/A276; 63, 65 series—brass CDA 360/B16*
17 *Support rings (2)*	*316 SS/A240*		
18 *Seats (2)*	*Reinforced PTFE④*		
19 *Coned-disc springs (2)*	*Strain-hardened 316 SS/A167 or A240*		
20 *Flange seals (2)*	*Fluorocarbon FKM⑦*		
21 *Flanges (2)*	*316L SS/A479 or CF3M/A351*	*WCB⑤/A216*	*Brass CDA 360/B16*
22 Body fasteners (4)	316 SS gr B8M cl 2/A193	Cadmium-plated carbon steel grade 8/SAE J429⑧	
23 Body hex nuts (8 or 4)	316 SS gr 8M str hd/A194	Cadmium-plated carbon steel grade 8/SAE J995⑨	
Lubricants	*Silicone-based and PTFE-based; other lubricants available*		

Wetted components listed in *italics*.

① **Special alloy materials** available include alloy 400, alloy C-276, alloy 20, alloy 600, and titanium. Contact your authorized Swagelok sales and service representative.

② 62 series—no upper stem spring and stop plate integral with handle.

③ Valves assembled with pneumatic actuators contain a lock tab (not shown) to secure the nut to the stem.

④ Additional materials available; see **Additional Seat Materials,** below.

⑤ Coated with hydrocarbon rust-preventive compound.

⑥ Coated with molybdenum disulfide with hydrocarbon binder. Alloy X-750—2 bearings; PEEK—1 bearing.

⑦ Additional materials available; see **Flange Seal Kits,** page 21.

⑧ 62 series—material specification is ASTM A574.

⑨ 62 series—nuts are grade 4130 or 4140/ASTM A322 or A331.

Additional Seat Materials

Valves with Seats of...	Also Contain...	And These Lubricants
Alloy X-750①	S17400 SS ball① and 316 SS back seats	Silicone-based, fluorinated tungsten disulfide-based, and PTFE-based
Carbon/glass PTFE	Same as valves with PTFE seats	
PEEK①②	PEEK stem bearing① and packing①	PTFE-based
UHMWPE	UHMWPE packing, PEEK stem bearing,① ethylene propylene O-rings, and uncoated packing gland	Hydrocarbon-based and silicone-based
Virgin PTFE	Virgin PTFE packing	Silicone-based and PTFE-based

① Molybdenum disulfide coated.

② 62 and 65 series—Grafoil®-lined coned-disc springs; 67 and 68 series—PEEK-lined coned-disc springs.

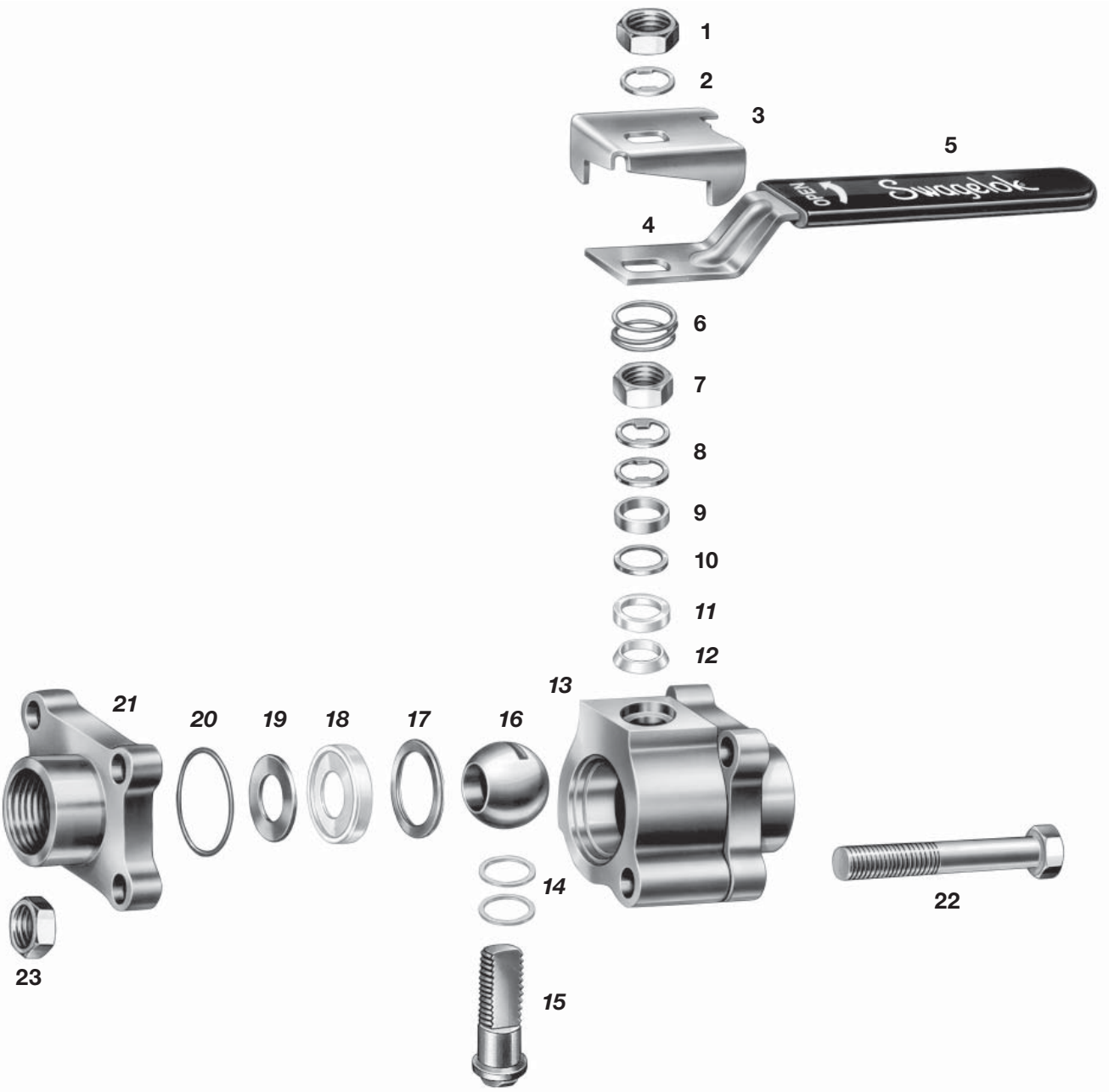

Testing

Plastic-Seated Valves

Every 60 series ball valve is factory tested with nitrogen at 1000 psig (69 bar) or its maximum working pressure if less than 1000 psig (69 bar). Seats have a maximum allowable leak rate of 0.1 std cm^3/min.

Shell testing with nitrogen at 1000 psig (69 bar) or the maximum rated pressure if less than 1000 psig (69 bar) is performed on 62, 63, and 65 series valves to a requirement of no detectable leakage with a liquid leak detector.

Shell testing with water at 1.5 times the maximum working pressure is performed on 67 and 68 series valves.

Metal-Seated Valves and 3-Way PEEK-Seated Valves

Every 60 series ball valve is factory tested with nitrogen at 50 psig (3.4 bar) for leak-tight integrity of the seats as specified by FCI 70-2 Specification Class VI.

Shell testing with nitrogen at 1000 psig (69 bar) or the maximum rated pressure if less than 1000 psig (69 bar) is performed on 62, 63, and 65 series valves to a requirement of no detectable leakage with a liquid leak detector.

Shell testing with gas at 1.5 times the maximum working pressure is performed on stainless steel 67 and 68 series valves.

Special-Application Valves

Certain valves may have different testing requirements, as described in **Special-Application Valves.**

Cleaning and Packaging

Every 60 series ball valve is cleaned in accordance with Swagelok *Standard Cleaning and Packaging (SC-10),* MS-06-62. Cleaning and packaging in accordance with Swagelok *Special Cleaning and Packaging (SC-11),* MS-06-63, to ensure compliance with product cleanliness requirements stated in ASTM G93 Level C is available. Contact your authorized Swagelok representative for more information.

Pressure-Temperature Ratings

Pressure-temperature ratings are based on standard materials of construction, as listed on page 4 and in the table notes below. Ratings for valves with alternative materials of construction may not match those shown. For example, 2-way, stainless steel 67 and 68 series valves with reinforced PTFE seats are rated at 2200 psig at 100°F (151 bar at 37°C) when assembled with optional cadmium-plated carbon steel grade 8 fasteners.

Reinforced PTFE Seats (60T Series)

Flow Pattern	On-Off (2-Way)					Switching (3-Way)	
Series	62, 63, 65, W63, W65	67, 68	62, 63, 65, 67, 68	62	63, 65	62, 63, 65	67, 68
Material	Stainless Steel		Steel	Brass		Stainless Steel	
Temperature, °F (°C)	Working Pressure, psig (bar)						
–20 (–28) to 100 (37)	2200 (151)	1500 (103)	2200 (151)	2000 (137)	1500 (103)	1000 (68.9)	500 (34.4)
150 (65)	1850 (127)	1210 (83.3)	1850 (127)	1680 (115)	1260 (86.8)	1000 (68.9)	500 (34.4)
200 (93)	1500 (103)	930 (64.0)	1500 (103)	1360 (93.7)	1030 (70.9)	1000 (68.9)	500 (34.4)
250 (121)	1150 (79.2)	880 (60.6)	1150 (79.2)	1050 (72.3)	800 (55.1)	1000 (68.9)	500 (34.4)
300 (148)	800 (55.1)	780 (53.7)	800 (55.1)	780 (53.7)	560 (38.5)	800 (55.1)	500 (34.4)
350 (176)	560 (38.5)	560 (38.5)	560 (38.5)	410 (28.2)	330 (22.7)	560 (38.5)	500 (34.4)
400 (204)	330 (22.7)	330 (22.7)	330 (22.7)	100 (6.8)	100 (6.8)	330 (22.7)	330 (22.7)
450 (232)	100 (6.8)	100 (6.8)	100 (6.8)	—	—	100 (6.8)	100 (6.8)

Ratings based on reinforced PTFE seats and packings and alloy X-750 stem bearings on stainless steel or steel, PEEK stem bearings on brass, and fluorocarbon FKM O-rings.

Fastener materials: 316 SS on stainless steel valves and carbon steel grade 8 on steel or brass valves.

Steel valves with Swagelok tube fitting end connections: 375°F (190°C) max.

Alloy X-750 Seats (60M Series)

Flow Pattern	On-Off (2-Way)			
Series	63, 65	67, 68	63, 65	67, 68
Material	Stainless Steel		Steel	
Temperature, °F (°C)	Working Pressure, psig (bar)			
–20 (–28) to 350 (176)	1000 (68.9)	500 (34.4)	1000 (68.9)	500 (34.4)
400 (204)	970 (66.8)	500 (34.4)	1000 (68.9)	500 (34.4)
450 (232)	800 (55.1)	500 (34.4)	800 (55.1)	500 (34.4)

Ratings based on alloy X-750 seats and stem bearings, reinforced PTFE packings, and fluorocarbon FKM O-rings.

Fastener materials: 316 SS on stainless steel valves and carbon steel grade 8 on steel valves.

Steel valves with Swagelok tube fitting end connections: 375°F (190°C) max.

Carbon/Glass PTFE Seats (60C Series)

Flow Pattern	On-Off (2-Way)								Switching (3-Way)	
Series	62	W63, W65	63, 65	67, 68	62, 63, 65	67, 68	62	63, 65	62, 63, 65	67, 68
Material	Stainless Steel				Steel		Brass		Stainless Steel	
Temperature, °F (°C)	Working Pressure, psig (bar)									
–20 (–28) to 100 (37)	2500 (172)	2500 (172)	2500 (172)	1500 (103)	2500 (172)	2200 (151)	2000 (137)	1500 (103)	1000 (68.9)	500 (34.4)
150 (65)	2430 (167)	2500 (172)	2030 (139)	1210 (83.3)	2250 (155)	1960 (135)	1680 (115)	1260 (86.8)	1000 (68.9)	500 (34.4)
200 (93)	1870 (128)	2000 (137)	1560 (107)	930 (64.0)	2000 (137)	1760 (121)	1360 (93.7)	1030 (70.9)	1000 (68.9)	500 (34.4)
250 (121)	1620 (111)	1620 (111)	1480 (101)	880 (60.6)	1620 (111)	1570 (108)	1050 (72.3)	800 (55.1)	1000 (68.9)	500 (34.4)
300 (148)	1240 (85.4)	1240 (85.4)	1240 (85.4)	780 (53.7)	1240 (85.4)	1240 (85.4)	730 (50.2)	560 (38.5)	1000 (68.9)	500 (34.4)
350 (176)	860 (59.2)	860 (59.2)	860 (59.2)	680 (46.8)	860 (59.2)	860 (59.2)	410 (28.2)	330 (22.7)	860 (59.2)	500 (34.4)
400 (204)	480 (33.0)	480 (33.0)	480 (33.0)	480 (33.0)	480 (33.0)	480 (33.0)	100 (6.8)	100 (6.8)	480 (33.0)	480 (33.0)
450 (232)	100 (6.8)	100 (6.8)	100 (6.8)	100 (6.8)	100 (6.8)	100 (6.8)	—	—	100 (6.8)	100 (6.8)

Ratings based on carbon/glass PTFE seats, reinforced PTFE packings, and alloy X-750 stem bearings on stainless steel or steel; PEEK stem bearings on brass; and fluorocarbon FKM O-rings.

Fastener materials: 316 SS on stainless steel valves and carbon steel grade 8 on steel or brass valves.

Steel valves with Swagelok tube fitting end connections: 375°F (190°C) max.

PEEK Seats (60P Series)

Flow Pattern	On-Off (2-Way)							
Series	62	63, 65	67, 68	62	63, 65	67, 68	62	63, 65
Material	Stainless Steel			Steel			Brass	
Temperature, °F (°C)	Working Pressure, psig (bar)							
–20 (–28) to 100 (37)	3000 (206)	2500 (172)	1500 (103)	3000 (206)	2500 (172)	2200 (151)	2000 (137)	1500 (103)
150 (65)	2420 (166)	2030 (139)	1210 (83.3)	2250 (155)	2250 (155)	1960 (135)	1680 (115)	1260 (86.8)
200 (93)	1870 (128)	1560 (107)	930 (64.0)	2010 (138)	2010 (138)	1760 (121)	1360 (93.7)	1030 (70.9)
250 (121)	1770 (121)	1480 (101)	880 (60.6)	1770 (121)	1770 (121)	1570 (108)	1050 (72.3)	800 (55.1)
300 (148)	1600 (110)	1310 (90.2)	780 (53.7)	1520 (104)	1520 (104)	1370 (94.3)	730 (50.2)	560 (38.5)
350 (176)	1430 (98.5)	1140 (78.5)	690 (47.5)	1280 (88.1)	1280 (88.1)	1180 (81.3)	410 (28.2)	330 (22.7)
400 (204)	1260 (86.8)	970 (66.8)	590 (40.6)	1040 (71.6)	1040 (71.6)	990 (68.2)	100 (6.8)	100 (6.8)
450 (232)	800 (55.1)	800 (55.1)	500 (34.4)	800 (55.1)	800 (55.1)	800 (55.1)	—	—

Flow Pattern	Switching (3-Way)		
Series	62	63, 65	67, 68
Material	Stainless Steel		
Temperature, °F (°C)	Working Pressure, psig (bar)		
–20 (–28) to 350 176)	1000 (68.9)	1000 (68.9)	500 (34.4)
400 (204)	1000 (68.9)	970 (66.8)	500 (34.4)
450 (232)	800 (55.1)	800 (55.1)	500 (34.4)

Ratings based on PEEK seats, packings, and stem bearings, and fluorocarbon FKM quad-seal flange seals.

Fastener materials: 316 SS on stainless steel valves and carbon steel grade 8 on steel or brass valves.

Steel valves with Swagelok tube fitting end connections: 375°F (190°C) max.

Polyethylene Seats (60E Series)

Flow Pattern	On-Off (2-Way)								Switching (3-Way)	
Series	62, W63, W65	63, 65	67, 68	62	63, 65	67, 68	62	63, 65	62, 63, 65	67, 68
Material	Stainless Steel			Steel			Brass		Stainless Steel	
Temperature, °F (°C)	Working Pressure, psig (bar)									
–20 (–28) to 100 (37)	3000 (206)	2500 (172)	1500 (103)	3000 (206)	2500 (172)	2200 (151)	2000 (137)	1500 (103)	1000 (68.9)	500 (34.4)
150 (65)	2080 (143)	2030 (139)	1210 (83.3)	2080 (143)	2030 (139)	1960 (135)	1680 (115)	1260 (86.8)	1000 (68.9)	500 (34.4)
200 (93)	1160 (79.9)	1160 (79.9)	930 (64.0)	1160 (79.9)	1160 (79.9)	1160 (79.9)	1160 (79.9)	1030 (70.9)	1000 (68.9)	500 (34.4)
250 (121)	250 (17.2)	250 (17.2)	250 (17.2)	250 (17.2)	250 (17.2)	250 (17.2)	250 (17.2)	250 (17.2)	250 (17.2)	250 (17.2)

Ratings based on UHMWPE seats and packings, PEEK stem bearings, and ethylene propylene O-rings.

Fastener materials: 316 SS on stainless steel valves and carbon steel grade 8 on steel or brass valves.

Steel valves with Swagelok tube fitting end connections: 375°F (190°C) max.

Virgin PTFE Seats (60V Series)

Flow Pattern	On-Off (2-Way)					Switching (3-Way)	
Series	62, 63, 65, W63, W65	67, 68	62, 63, 65, 67, 68	62	63, 65	62, 63, 65	67, 68
Material	Stainless Steel		Steel	Brass		Stainless Steel	
Temperature, °F (°C)	Working Pressure, psig (bar)						
–20 (–28) to 100 (37)	1500 (103)	1500 (103)	1500 (103)	1500 (103)	1500 (103)	1000 (68.9)	500 (34.4)
150 (65)	1500 (103)	1210 (83.3)	1500 (103)	1500 (103)	1260 (86.8)	1000 (68.9)	500 (34.4)
200 (93)	1500 (103)	930 (64.0)	1500 (103)	1360 (93.7)	1030 (70.9)	1000 (68.9)	500 (34.4)
250 (121)	1150 (79.2)	880 (60.6)	1150 (79.2)	1050 (72.3)	800 (55.1)	1000 (68.9)	500 (34.4)
300 (148)	800 (55.1)	780 (53.7)	800 (55.1)	730 (50.2)	560 (38.5)	800 (55.1)	500 (34.4)
350 (176)	560 (38.5)	560 (38.5)	560 (38.5)	410 (28.2)	330 (22.7)	560 (38.5)	500 (34.4)
400 (204)	330 (22.7)	330 (22.7)	330 (22.7)	100 (6.8)	100 (6.8)	330 (22.7)	330 (22.7)
450 (232)	100 (6.8)	100 (6.8)	100 (6.8)	—	—	100 (6.8)	100 (6.8)

Ratings based on virgin PTFE seats and packings and alloy X-750 stem bearings on stainless steel or steel, PEEK stem bearings on brass, and fluorocarbon FKM O-rings.

Fastener materials: 316 SS on stainless steel valves and carbon steel grade 8 on steel or brass valves.

Steel valves with Swagelok tube fitting end connections: 375°F (190°C) max.

Ordering Information

On-Off (2-Way) Valves

Select an ordering number from the **Dimensions** tables starting on page 9.

See the table below for availability of other valve body materials. To order, replace **SS** with **B** or **S.**

Examples: **B**-62TS4
S-62TS4

Valve Body Material	Designator	Availability
316 SS	SS	Not available in chlorine series
Brass	B	2-way 62, 63, 65 series only; not available in steam, thermal, fire, chlorine, all-welded, or quad seal-packed valves
Carbon steel	S	2-way only; required in chlorine series

Additional Seat Materials

Most valve ordering numbers specify reinforced PTFE seat material. For other seat materials, replace **T** with the desired designator.

Examples: SS-62**P**S4
S-62**E**S4

Seat Material	Designator	Availability
Reinforced PTFE	T	Not available in steam, thermal, or chlorine series
Alloy X-750	M	Not available in steam, fire, chlorine, or all-welded series; required in thermal series
Carbon/glass PTFE	C	Not available in steam, thermal, or chlorine series
PEEK	P	Not available in fire, thermal, chlorine, or all-welded series; required in steam series
UHMWPE	E	Not available in steam, fire, thermal, or chlorine series
Virgin PTFE	V	Not available in steam, fire, or thermal series; required in chlorine series

Switching (3-Way) Valves

Switching (3-way) valves are available with:

- stainless steel valve body material
- standard or low-temperature service
- all seat materials except alloy X-750
- bottom end connections shown below at right.

To order a switching (3-way) valve with three of the **same end connections,** insert **X** into the valve ordering number.

Example: SS-62**X**TF4

To order a switching (3-way) valve with a **different bottom end connection,** insert **X** into the valve ordering number and add a bottom end connection designator.

Example: SS-62**X**TF4**-S4**

To order **three different end connections,** contact your authorized Swagelok representative.

To order a switching (3-way) valve with **an L flow pattern,** contact your authorized Swagelok representative.

Cross-Port Mixing of Fluids

A spherical ball is available in valves with UHMWPE or PEEK seats to prevent cross-port mixing of fluids. To order, insert **O** into the ordering number.

Example: SS-62X**O**PF4

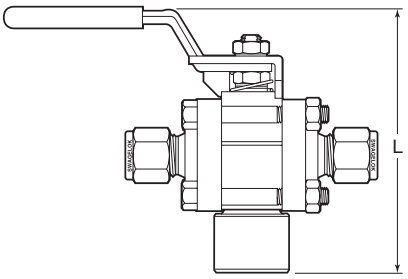

Valve Series	Bottom End Connection	Designator	L in. (mm)
62	1/4 in. female NPT 1/4 in. female ISO tapered 1/4 in. Swagelok tube fitting	-F4 -F4RT -S4	3.12 (79.2) 3.12 (79.2) 3.35 (85.1)
63	3/8 in. Swagelok tube fitting 1/2 in. female NPT 1/2 in. female ISO tapered 1/2 in. Swagelok tube fitting	-S6 -F8 -F8RT -S8	4.37 (111) 4.19 (106) 4.19 (106) 4.48 (114)
65	3/4 in. female NPT 3/4 in. female ISO tapered 1 in. female NPT 1 in. female ISO tapered	-F12 -F12RT -F16 -F16RT	5.45 (138)
67	1 1/2 in. female NPT	-F24	6.86 (174)
68	2 in. female NPT	-F32	7.21 (183)

Dimensions

Dimensions, in inches (millimeters), are for reference only and are subject to change.

Swagelok Tube Fitting End Connections

Dimensions shown with Swagelok nuts finger-tight. See **Ordering Information,** page 8.

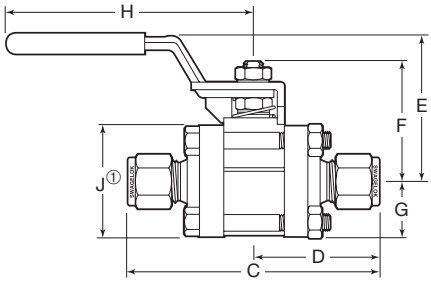

Size	Ordering Number	Orifice in. (mm)	C_v	Dimensions, in. (mm)						
				C	D	E	F	G	H	J①
1/4 in.	SS-62TS4	0.188 (4.8)	1.2	3.17 (80.5)	1.59 (40.4)	1.66 (42.2)	1.26 (32.0)	0.68 (17.3)	2.37 (60.2)	1.35 (34.3)
3/8 in.	SS-62TS6	0.281 (7.1)	3.8	3.17 (80.5)	1.59 (40.4)	1.66 (42.2)	1.26 (32.0)	0.68 (17.3)	2.37 (60.2)	1.35 (34.3)
1/2 in.	SS-63TS8	0.406 (10.3)	7.5	4.04 (103)	2.02 (51.3)	2.35 (59.7)	1.79 (45.5)	0.89 (22.6)	4.50 (114)	1.78 (45.2)
3/4 in.	SS-63TS12	0.516 (13.1)	13.6	4.04 (103)	2.02 (51.3)	2.35 (59.7)	1.79 (45.5)	0.89 (22.6)	4.50 (114)	1.78 (45.2)
1 in.	SS-65TS16	0.875 (22.2)	40	5.36 (136)	2.68 (68.1)	2.94 (74.7)	2.52 (64.0)	1.25 (31.8)	6.00 (152)	2.50 (63.5)
1 1/2 in.	SS-67TS24	1.250 (31.8)	100	7.59 (193)	3.79 (96.3)	4.03 (102)	3.14 (79.8)	1.53 (38.9)	9.14 (232)	3.06 (77.7)
2 in.	SS-68TS32	1.500 (38.1)	130	9.95 (253)	4.97 (126)	4.16 (106)	3.36 (85.3)	1.74 (44.2)	9.14 (232)	3.47 (88.1)
6 mm	SS-62TS6MM	0.188 (4.8)	1.2	3.17 (80.5)	1.59 (40.4)	1.66 (42.2)	1.26 (32.0)	0.68 (17.3)	2.37 (60.2)	1.35 (34.3)
8 mm	SS-62TS8MM	0.250 (6.4)	2.5	3.17 (80.5)	1.59 (40.4)	1.66 (42.2)	1.26 (32.0)	0.68 (17.3)	2.37 (60.2)	1.35 (34.3)
10 mm	SS-62TS10MM	0.281 (7.1)	3.8	3.20 (81.3)	1.60 (40.6)	1.66 (42.2)	1.26 (32.0)	0.68 (17.3)	2.37 (60.2)	1.35 (34.3)
12 mm	SS-63TS12MM	0.375 (9.5)	7.5	4.04 (103)	2.02 (51.3)	2.35 (59.7)	1.79 (45.5)	0.89 (22.6)	4.50 (114)	1.78 (45.2)
18 mm	SS-63TS18MM	0.516 (13.1)	13.6	4.04 (103)	2.02 (51.3)	2.35 (59.7)	1.79 (45.5)	0.89 (22.6)	4.50 (114)	1.78 (45.2)
25 mm	SS-65TS25MM	0.875 (22.2)	40	5.36 (136)	2.68 (68.1)	2.94 (74.7)	2.52 (64.0)	1.25 (31.8)	6.00 (152)	2.50 (63.5)

All 67 and 68 stainless steel steam and thermal series valves and 67 and 68 series valves with UHMWPE seats are assembled with silver-plated front ferrules. All other 67 and 68 series stainless steel valves are assembled with PFA-coated front ferrules.

① Height and width of 63 through 68 series flanges. Height of 62 series flange is 1.59 in. (40.4 mm); width is J dimension.

Swagelok Hydraulic Swaging Unit

When installing a Swagelok 60 series ball valve with tube fittings larger than 1 in., the Swagelok MHSU hydraulic swaging unit is needed. The unit swages the ferrules onto the tubing without applying stress to fitting body threads. See the Swagelok *Multihead Hydraulic Swaging Unit* catalog, MS-02-154, for more information.

Female Pipe Thread End Connections

Female NPT pipe thread dimensions conform to ASME B1.20.1. ISO tapered thread dimensions conform to ISO 7/1, EN 10226-1, DIN 2999, and JIS B0203. See **Ordering Information,** page 8.

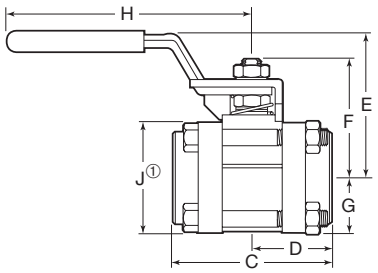

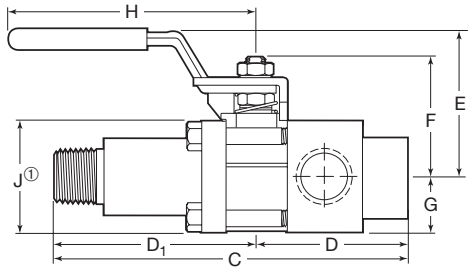

Size	Ordering Number	Orifice in. (mm)	C_v	Dimensions, in. (mm)							
				C	D	D_1	E	F	G	H	J①
Female NPT											
1/8 in.	SS-62TF2	0.281 (7.1)	3.8	2.16 (54.9)	1.08 (27.4)	—	1.66 (42.2)	1.26 (32.0)	0.68 (17.3)	2.37 (60.2)	1.35 (34.3)
1/4 in.	SS-62TF4	0.281 (7.1)	3.8	2.16 (54.9)	1.08 (27.4)	—	1.66 (42.2)	1.26 (32.0)	0.68 (17.3)	2.37 (60.2)	1.35 (34.3)
3/8 in.	SS-63TF6	0.516 (13.1)	12	2.70 (68.6)	1.35 (34.3)	—	2.35 (59.7)	1.79 (45.5)	0.89 (22.6)	4.50 (114)	1.78 (45.2)
1/2 in.	SS-63TF8	0.516 (13.1)	12	2.70 (68.6)	1.35 (34.3)	—	2.35 (59.7)	1.79 (45.5)	0.89 (22.6)	4.50 (114)	1.78 (45.2)
3/4 in.	SS-65TF12	0.875 (22.2)	31	3.59 (91.2)	1.80 (45.7)	—	2.94 (74.7)	2.52 (64.0)	1.25 (31.8)	6.00 (152)	2.50 (63.5)
1 in.	SS-65TF16	0.875 (22.2)	38	3.59 (91.2)	1.80 (45.7)	—	2.94 (74.7)	2.52 (64.0)	1.25 (31.8)	6.00 (152)	2.50 (63.5)
1 1/4 in.	SS-67TF20	1.250 (31.8)	90	4.39 (112)	2.19 (55.6)	—	4.03 (102)	3.14 (79.8)	1.53 (38.9)	9.14 (232)	3.06 (77.7)
1 1/2 in.	SS-67TF24	1.250 (31.8)	100	4.39 (112)	2.19 (55.6)	—	4.03 (102)	3.14 (79.8)	1.53 (38.9)	9.14 (232)	3.06 (77.7)
2 in.	SS-68TF32	1.500 (38.1)	130	4.94 (125)	2.47 (62.7)	—	4.16 (106)	3.36 (85.3)	1.74 (44.2)	9.14 (232)	3.47 (88.1)
Female ISO Tapered											
1/4 in.	SS-62TF4RT	0.281 (7.1)	3.8	2.16 (54.9)	1.08 (27.4)	—	1.66 (42.2)	1.26 (32.0)	0.68 (17.3)	2.31 (58.7)	1.35 (34.3)
1/2 in.	SS-63TF8RT	0.516 (13.1)	12	2.70 (68.6)	1.35 (34.3)	—	2.35 (59.7)	1.79 (45.5)	0.89 (22.6)	4.50 (114)	1.78 (45.2)
3/4 in.	SS-65TF12RT	0.875 (22.2)	31	3.59 (91.2)	1.80 (45.7)	—	2.94 (74.7)	2.52 (64.0)	1.25 (31.8)	6.00 (152)	2.50 (63.5)
1 in.	SS-65TF16RT	0.875 (22.2)	38	4.45 (113)	2.23 (56.6)	—	2.94 (74.7)	2.52 (64.0)	1.25 (31.8)	6.00 (152)	2.50 (63.5)
1 1/2 in.	SS-67TF24RT	1.250 (31.8)	100	5.45 (138)	2.72 (69.1)	—	4.03 (102)	3.14 (79.8)	1.53 (38.9)	9.14 (232)	3.06 (77.7)
2 in.	SS-68TF32RT	1.500 (38.1)	130	7.00 (178)	3.50 (88.9)	—	4.29 (109)	3.36 (85.3)	1.74 (44.2)	9.14 (232)	3.47 (88.1)
Male Lagging Extension to Female NPT with Gauge Ports											
1/2 to 1/2 in.	SS-63TM8L-GF8	0.411 (10.4)	7.5	5.44 (138)	2.34 (59.4)	3.09 (78.5)	2.35 (59.7)	1.79 (45.5)	0.89 (22.6)	4.50 (114)	1.78 (45.2)
3/4 to 1/2 in.	SS-63TM12L-GF8	0.500 (12.7)	11.3	5.44 (138)	2.34 (59.4)	3.09 (78.5)	2.35 (59.7)	1.79 (45.5)	0.89 (22.6)	4.50 (114)	1.78 (45.2)

① Height and width of 63 through 68 series flanges. Height of 62 series flange is 1.59 in. (40.4 mm); width is J dimension.

Steam Trap Test Assembly

Designed for use with saturated steam systems, the Swagelok TVA series integrated test valve assembly consists of two 63 series ball valves and a universal mount for use with a customer-supplied steam trap. The test assembly offers fast visual monitoring of condensate removal with a simple quarter turn of the test valve.

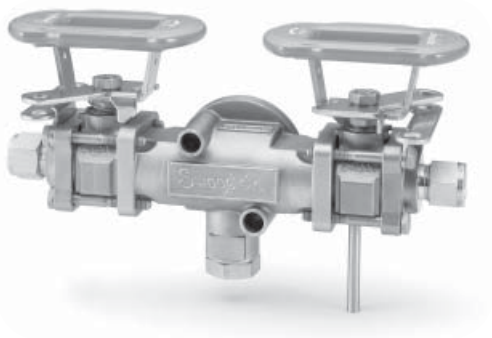

See the Swagelok *Integrated Test Valve Assembly with Universal Mount* catalog, MS-02-221, for more information.

Tube and Pipe Socket Weld End Connections

Pipe socket diameter and depth conform to ASME B16.11. See **Ordering Information,** page 8.

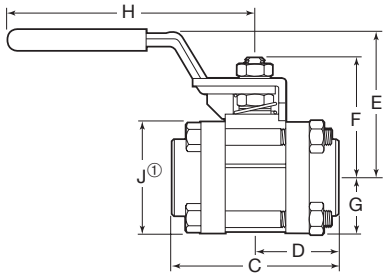

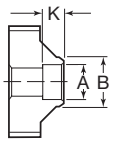

Tube Socket Weld

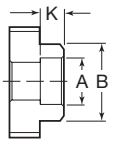

Pipe Socket Weld

Size	Ordering Number	Orifice in. (mm)	C_v	Dimensions, in. (mm)									
				A	B	C	D	E	F	G	H	J①	K
Tube Socket Weld													
1/4 in.	SS-62TSW4T	0.188 (4.8)	1.2	0.257 (6.5)	0.540 (13.7)	2.16 (54.9)	1.08 (27.4)	1.66 (42.2)	1.26 (32.0)	0.68 (17.3)	2.37 (60.2)	1.35 (34.3)	0.28 (7.1)
3/8 in.	SS-62TSW6T	0.281 (7.1)	3.8	0.382 (9.7)	0.675 (17.1)	2.16 (54.9)	1.08 (27.4)	1.66 (42.2)	1.26 (32.0)	0.68 (17.3)	2.37 (60.2)	1.35 (34.3)	0.31 (7.9)
1/2 in.	SS-63TSW8T	0.411 (10.4)	7.5	0.507 (12.9)	0.840 (21.3)	2.70 (68.6)	1.34 (34.0)	2.35 (59.7)	1.79 (45.5)	0.89 (22.6)	4.50 (114)	1.78 (45.2)	0.38 (9.7)
3/4 in.	SS-63TSW12T	0.516 (13.1)	13.6	0.757 (19.2)	1.050 (26.7)	2.70 (68.6)	1.34 (34.0)	2.35 (59.7)	1.79 (45.5)	0.89 (22.6)	4.50 (114)	1.78 (45.2)	0.44 (11.2)
1 in.	SS-65TSW16T	0.875 (22.2)	40	1.009 (25.6)	1.315 (33.4)	3.59 (91.2)	1.80 (45.7)	2.94 (74.7)	2.52 (64.0)	1.25 (31.8)	6.00 (152)	2.50 (63.5)	0.62 (15.7)
1 1/4 in.	SS-67TSW20T	1.125 (28.6)	80	1.259 (32.0)	1.660 (42.2)	4.39 (112)	2.19 (55.6)	4.03 (102)	3.14 (79.8)	1.53 (38.9)	9.14 (232)	3.06 (77.7)	0.62 (15.7)
1 1/2 in.	SS-67TSW24T	1.250 (31.8)	100	1.509 (38.3)	2.450 (62.2)	4.39 (112)	2.19 (55.6)	4.03 (102)	3.14 (79.8)	1.53 (38.9)	9.14 (232)	3.06 (77.7)	0.75 (19.1)
2 in.	SS-68TSW32T	1.500 (38.1)	130	2.012 (51.1)	2.760 (70.1)	4.94 (125)	2.47 (62.7)	4.16 (106)	3.36 (85.3)	1.74 (44.2)	9.14 (232)	3.47 (88.1)	0.75 (19.1)
Pipe Socket Weld													
1/2 in.	SS-63TSW8P	0.516 (13.1)	15	0.860 (21.8)	1.228 (31.2)	2.70 (68.6)	1.34 (34.0)	2.35 (59.7)	1.79 (45.5)	0.89 (22.6)	4.50 (114)	1.78 (45.2)	0.38 (9.7)
3/4 in.	SS-65TSW12P	0.875 (22.2)	36	1.070 (27.2)	1.660 (42.2)	3.59 (91.2)	1.80 (45.7)	2.94 (74.7)	2.52 (64.0)	1.25 (31.8)	6.00 (152)	2.50 (63.5)	0.50 (12.7)
1 in.	SS-65TSW16P	0.875 (22.2)	42	1.335 (33.9)	1.783 (45.3)	3.59 (91.2)	1.80 (45.7)	2.94 (74.7)	2.52 (64.0)	1.25 (31.8)	6.00 (152)	2.50 (63.5)	0.50 (12.7)
1 1/4 in.	SS-67TSW20P	1.250 (31.8)	90	1.680 (42.7)	2.450 (62.2)	4.51 (115)	2.25 (57.2)	4.03 (102)	3.14 (79.8)	1.53 (38.9)	9.14 (232)	3.06 (77.7)	0.50 (12.7)
1 1/2 in.	SS-67TSW24P	1.250 (31.8)	100	1.920 (48.8)	2.450 (62.2)	4.57 (116)	2.29 (58.2)	4.03 (102)	3.14 (79.8)	1.53 (38.9)	9.14 (232)	3.06 (77.7)	0.50 (12.7)
2 in.	SS-68TSW32P	1.500 (38.1)	130	2.411 (61.2)	2.957 (75.1)	4.94 (125)	2.47 (62.7)	4.16 (106)	3.36 (85.3)	1.70 (43.2)	9.14 (232)	3.41 (86.6)	0.63 (16.0)

① Height and width of 63 through 68 series flanges. Height of 62 series flange is 1.59 in. (40.4 mm); width is J dimension.

Swagelok Welding Systems

The Swagelok welding system offers consistent, repeatable orbital gas tungsten arc welds (GTAW). It can be used to weld a variety of weld end connections available on Swagelok 60 series ball valves.

See the Swagelok *Orbital Welding System Quick Reference Guide,* MS-02-143, for more information.

Pipe Butt Weld End Connections

Pipe butt weld end connections conform to ASME B16.25. See **Ordering Information,** page 8.

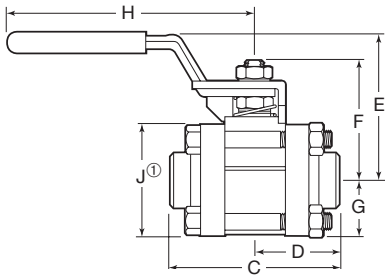

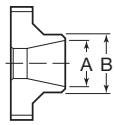

Size	Ordering Number	Orifice in. (mm)	C_v	Dimensions, in. (mm)								
				A	B	C	D	E	F	G	H	J①
Schedule 10												
1/4 in.	SS-62TW4P10	0.188 (4.8)	1.2	0.410 (10.4)	0.540 (13.7)	2.08 (52.8)	1.04 (26.4)	1.66 (42.2)	1.26 (32.0)	0.68 (17.3)	2.37 (60.2)	1.35 (34.3)
1/2 in.	SS-63TW8P10	0.516 (13.1)	15	0.674 (17.1)	0.840 (21.3)	2.69 (68.3)	1.34 (34.0)	2.35 (59.7)	1.79 (45.5)	0.89 (22.6)	4.50 (114)	1.78 (45.2)
3/4 in.	SS-65TW12P10	0.875 (22.2)	36	0.884 (22.5)	1.050 (26.7)	3.59 (91.2)	1.80 (45.7)	2.94 (74.7)	2.52 (64.0)	1.25 (31.8)	6.00 (152)	2.51 (63.8)
1 in.	SS-65TW16P10	0.875 (22.2)	40	1.097 (27.9)	1.315 (33.4)	3.46 (87.9)	1.73 (43.9)	2.94 (74.7)	2.52 (64.0)	1.25 (31.8)	6.00 (152)	2.51 (63.8)
1 1/2 in.	SS-67TW24P10	1.250 (31.8)	100	1.682 (42.7)	1.900 (48.3)	4.47 (114)	2.23 (56.6)	4.03 (102)	3.14 (79.8)	1.53 (38.9)	9.14 (232)	3.06 (77.7)
2 in.	SS-68TW32P10	1.500 (38.1)	130	2.157 (54.8)	2.375 (60.3)	4.78 (121)	2.39 (60.7)	4.16 (106)	3.36 (85.3)	1.74 (44.2)	9.14 (232)	3.47 (88.1)
Schedule 40												
1/4 in.	SS-62TW4P40	0.188 (4.8)	1.2	0.364 (9.2)	0.540 (13.7)	2.08 (52.8)	1.04 (26.4)	1.66 (42.2)	1.26 (32.0)	0.68 (17.3)	2.37 (60.2)	1.35 (34.3)
1/2 in.	SS-63TW8P40	0.516 (13.1)	15	0.622 (15.8)	0.840 (21.3)	2.69 (68.3)	1.34 (34.0)	2.35 (59.7)	1.79 (45.5)	0.89 (22.6)	4.50 (114)	1.78 (45.2)
3/4 in.	SS-65TW12P40	0.824 (20.9)	36	0.824 (20.9)	1.050 (26.7)	3.59 (91.2)	1.80 (45.7)	2.94 (74.7)	2.52 (64.0)	1.25 (31.8)	6.00 (152)	2.50 (63.5)
1 in.	SS-65TW16P40	0.875 (22.2)	90	1.049 (26.6)	1.315 (33.4)	3.46 (87.9)	1.73 (43.9)	2.94 (74.7)	2.52 (64.0)	1.25 (31.8)	6.00 (152)	2.50 (63.5)
1 1/2 in.	SS-67TW24P40	1.250 (31.8)	100	1.610 (40.9)	1.900 (48.3)	4.47 (114)	2.23 (56.6)	4.03 (102)	3.14 (79.8)	1.53 (38.9)	9.14 (232)	3.06 (77.7)
2 in.	SS-68TW32P40	1.500 (38.1)	130	2.067 (52.5)	2.375 (60.3)	4.86 (123)	2.43 (61.7)	4.16 (106)	3.36 (85.3)	1.74 (44.2)	9.14 (232)	3.47 (88.1)
Schedule 80												
1/4 in.	SS-62TW4P80	0.188 (4.8)	1.2	0.302 (7.7)	0.540 (13.7)	2.08 (52.8)	1.04 (26.4)	1.66 (42.2)	1.26 (32.0)	0.68 (17.3)	2.37 (60.2)	1.35 (34.3)
3/8 in.	SS-62TW6P80	0.281 (7.1)	3.8	0.423 (10.7)	0.675 (17.1)	2.08 (52.8)	1.04 (26.4)	1.66 (42.2)	1.26 (32.0)	0.68 (17.3)	2.37 (60.2)	1.35 (34.3)
1/2 in.	SS-63TW8P80	0.516 (13.1)	6.8	0.546 (13.9)	0.840 (21.3)	2.69 (68.3)	1.34 (34.0)	2.35 (59.7)	1.79 (45.5)	0.89 (22.6)	4.50 (114)	1.78 (45.2)
3/4 in.	SS-63TW12P80	0.516 (13.1)	13.6	0.742 (18.8)	1.050 (26.7)	2.69 (68.3)	1.34 (34.0)	2.35 (59.7)	1.79 (45.5)	0.89 (22.6)	4.50 (114)	1.78 (45.2)
1 in.	SS-65TW16P80	0.875 (22.2)	40	0.942 (23.9)	1.315 (33.4)	3.45 (87.6)	1.73 (43.9)	2.94 (74.7)	2.52 (64.0)	1.25 (31.8)	6.00 (152)	2.50 (63.5)
1 1/4 in.	SS-67TW20P80	1.125 (28.6)	80	1.281 (32.5)	1.660 (42.2)	4.57 (116)	2.28 (57.9)	4.03 (102)	3.14 (79.8)	1.53 (38.9)	9.14 (232)	3.06 (77.7)
1 1/2 in.	SS-67TW24P80	1.250 (31.8)	100	1.500 (38.1)	1.900 (48.3)	4.57 (116)	2.28 (57.9)	4.03 (102)	3.14 (79.8)	1.53 (38.9)	9.14 (232)	3.06 (77.7)
2 in.	SS-68TW32P80	1.500 (38.1)	130	1.939 (49.3)	2.375 (60.3)	5.09 (129)	2.55 (64.8)	4.16 (106)	3.36 (85.3)	1.74 (44.2)	9.14 (232)	3.47 (88.1)

① Height and width of 63 through 68 series flanges. Height of 62 series flange is 1.59 in. (40.4 mm); width is J dimension.

Tube Extension End Connections

Tube extensions are available on stainless steel valves only. Tube extension material is 316L SS. See **Ordering Information,** page 8.

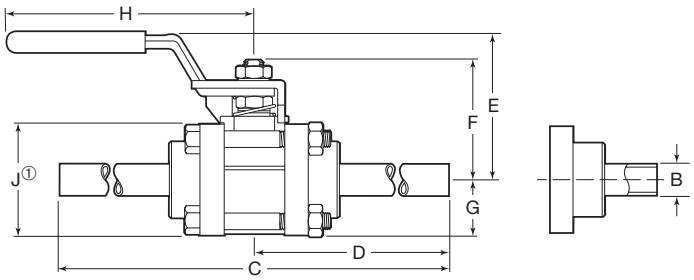

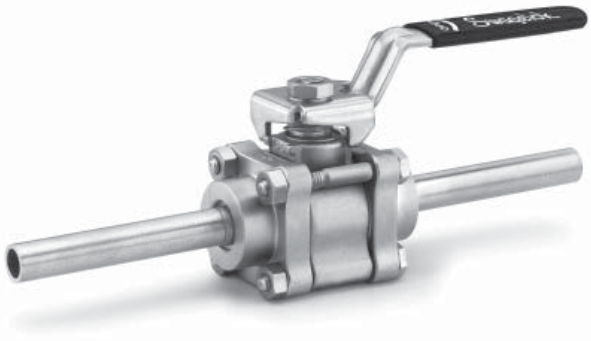

Size	Wall Thickness	Ordering Number	Orifice in. (mm)	C_v	Dimensions, in. (mm)							
					B	C	D	E	F	G	H	J①
1/4 in.	0.035 in.	SS-62TW4T35-3	0.180 (4.6)	1.1	0.250 (6.4)	8.12 (206)	4.05 (103)	1.66 (42.2)	1.26 (32.0)	0.68 (17.3)	2.37 (60.2)	1.35 (34.3)
3/8 in.	0.035 in.	SS-62TW6T35-3	0.281 (7.1)	3.8	0.250 (6.4)	8.12 (206)	4.05 (103)	1.66 (42.2)	1.26 (32.0)	0.68 (17.3)	2.37 (60.2)	1.35 (34.3)
1/2 in.	0.049 in.	SS-63TW8T49-3	0.402 (10.2)	7.2	0.500 (12.7)	8.51 (216)	4.26 (108)	2.35 (59.7)	1.79 (45.5)	0.89 (22.6)	4.50 (114)	1.78 (45.2)
1/2 in.	0.065 in.	SS-63TW8T65-3	0.370 (9.4)	6.1	0.500 (12.7)	8.51 (216)	4.26 (108)	2.35 (59.7)	1.79 (45.5)	0.89 (22.6)	4.50 (114)	1.78 (45.2)
3/4 in.	0.065 in.	SS-65TW12T65-3	0.620 (15.7)	18	0.750 (19.1)	9.53 (242)	4.77 (121)	2.94 (74.7)	2.52 (64.0)	1.25 (31.8)	6.00 (152)	2.50 (63.5)
1 in.	0.065 in.	SS-65TW16T65-3	0.870 (22.1)	36	1.000 (25.4)	9.53 (242)	4.77 (121)	2.94 (74.7)	2.52 (64.0)	1.25 (31.8)	6.00 (152)	2.50 (63.5)
1 1/2 in.	0.065 in.	SS-67TW24T65-3	1.250 (31.8)	100	1.500 (38.1)	10.5 (267)	5.27 (134)	4.03 (102)	3.14 (79.8)	1.53 (38.9)	9.14 (232)	3.06 (77.7)
2 in.	0.065 in.	SS-68TW32T65-3	1.500 (38.1)	130	2.000 (50.8)	11.3 (287)	5.65 (144)	4.16 (106)	3.36 (85.3)	1.74 (44.2)	9.14 (232)	3.47 (88.1)

① Height and width of 63 through 68 series flanges. Height of 62 series flange is 1.59 in. (40.4 mm); width is J dimension.

VCO O-Ring Face Seal and VCR Metal Gasket Face Seal Fitting End Connections

Face seal fitting end connections require minimal axial clearance for ease of installation and service. VCO fitting contains fluorocarbon FKM O-ring. See **Ordering Information,** page 8.

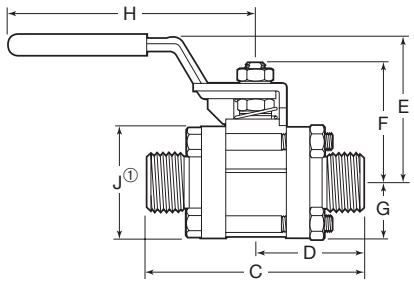

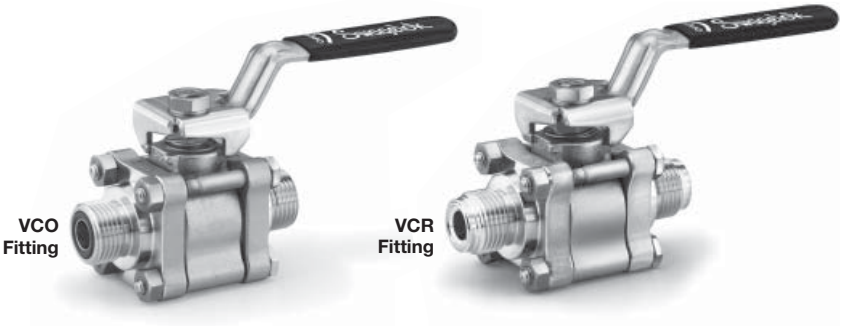

Size	Ordering Number	Orifice in. (mm)	C_v	Dimensions, in. (mm)						
				C	D	E	F	G	H	J①
VCO O-ring Face Seal Fitting										
1/4 in.	SS-62TVCO4	0.188 (4.8)	1.2	2.60 (66.0)	1.30 (33.0)	1.66 (42.2)	1.26 (32.0)	0.68 (17.3)	2.37 (60.2)	1.35 (34.3)
1/2 in.	SS-63TVCO8	0.406 (10.3)	7.5	3.25 (82.6)	1.62 (41.1)	2.35 (59.7)	1.79 (45.5)	0.89 (22.6)	4.50 (114)	1.78 (45.2)
VCR Metal Gasket Face Seal Fitting										
1/4 in.	SS-62TVCR4	0.188 (4.8)	1.2	2.47 (62.7)	1.23 (31.2)	1.66 (42.2)	1.26 (32.0)	0.68 (17.3)	2.37 (60.2)	1.32 (33.5)
1/2 in.	SS-63TVCR8	0.406 (10.3)	7.5	3.63 (92.2)	1.81 (46.0)	2.35 (59.7)	1.79 (45.5)	0.89 (22.6)	4.50 (114)	1.75 (44.5)

Pressure ratings of valves with VCR or VCO fitting end connections are based on the ratings of the mating fitting; see the Swagelok *VCR Metal Gasket Face Seal Fittings* and Swagelok *VCO O-Ring Face Seal Fittings* catalogs, MS-01-24 and MS-01-28.

① Height and width of 63 series flange. Height of 62 series flange is 1.59 in. (40.4 mm); width is J dimension.

Sanitary Fitting End Connections

Valves with Swagelok TS and SC sanitary fitting end connections are available in stainless steel only. The maximum pressure rating is 300 psig (20.6 bar); working pressure and temperature ratings of these valves may be limited by the gasket material and clamp used.

TS sanitary fitting end connections have a surface finish roughness average (R_a) of 15 µin. (0.38 µm). For more information, see the Swagelok *Biopharm Fittings—TS Series* catalog, MS-03-13.

SC sanitary clamp end connections are ISO 2852 compatible.

See **Ordering Information,** page 8.

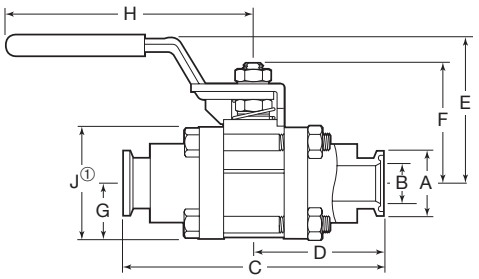

TS Sanitary Fittings

Size	Ordering Number	Orifice in. (mm)	C_v	Dimensions, in. (mm)								
				A	B	C	D	E	F	G	H	J①
1/2 in.	SS-63TTS8	0.370 (9.4)	7.5	0.99 (25.1)	0.37 (9.4)	3.50 (88.9)	1.75 (44.4)	2.35 (59.7)	1.79 (45.5)	0.89 (22.6)	4.50 (114)	1.78 (45.2)
3/4 in.	SS-63TTS12	0.516 (13.1)	15	0.99 (25.1)	0.62 (15.7)	3.50 (88.9)	1.75 (44.4)	2.35 (59.7)	1.79 (45.5)	0.89 (22.6)	4.50 (114)	1.78 (45.2)
1 in.	SS-65TTS16	0.873 (22.2)	42	1.99 (50.5)	0.87 (22.1)	4.50 (114)	2.25 (57.2)	2.94 (74.7)	2.52 (64.0)	1.25 (31.8)	6.00 (152)	2.50 (63.5)
1 1/2 in.	SS-67TTS24	1.250 (31.8)	100	1.99 (50.5)	1.37 (34.8)	5.50 (140)	2.75 (69.9)	4.03 (102)	3.14 (79.8)	1.53 (38.9)	9.14 (232)	3.06 (77.7)
2 in.	SS-68TTS32	1.500 (38.1)	130	2.52 (64.0)	1.87 (47.5)	6.25 (159)	3.12 (79.2)	4.16 (106)	3.36 (85.3)	1.74 (44.2)	9.14 (232)	3.47 (88.1)

① Height and width of 63 through 68 series flanges. Height of 62 series flange is 1.59 in. (40.4 mm); width is J dimension.

SC Sanitary Clamp Fittings

Size	Ordering Number	Orifice in. (mm)	C_v	Dimensions, in. (mm)								
				A	B	C	D	E	F	G	H	J①
1/2 in.	SS-62TSC8	0.281 (7.1)	7.1	0.99 (25.1)	0.37 (9.4)	3.56 (90.4)	1.78 (45.2)	1.66 (42.2)	1.26 (32.0)	0.68 (17.3)	2.37 (60.2)	1.35 (34.3)
3/4 in.	SS-63TSC12	0.516 (13.1)	13.2	0.99 (25.1)	0.62 (15.7)	4.06 (103)	2.03 (51.5)	2.35 (59.7)	1.79 (45.5)	0.89 (22.6)	4.50 (114)	1.78 (45.2)
1 in.	SS-65TSC16	0.872 (22.1)	42	1.99 (50.5)	0.87 (22.1)	4.50 (114)	2.25 (57.2)	2.94 (74.7)	2.52 (64.0)	1.25 (31.8)	6.00 (152)	2.50 (63.5)
1 1/2 in.	SS-67TSC24	1.250 (31.8)	100	1.98 (50.3)	1.37 (34.8)	5.50 (140)	2.75 (69.9)	4.03 (102)	3.14 (79.8)	1.53 (38.9)	9.14 (232)	3.06 (77.7)
2 in.	SS-68TSC32	1.500 (38.1)	130	2.52 (64.0)	1.87 (47.5)	6.25 (159)	3.12 (79.2)	4.16 (106)	3.36 (85.3)	1.74 (44.2)	9.14 (232)	3.47 (88.1)

① Height and width of 63 through 68 series flanges. Height of 62 series flange is 1.59 in. (40.4 mm); width is J dimension.

Mixed End Connections

60 series valves can be ordered with two different end connections. Contact your authorized Swagelok representative for ordering information.

Special-Application Valves

Steam Service (S60P Series)

Steam service ball valves can reduce lost energy, downtime, and safety hazards associated with leaking valves in a steam system. Unlike conventional sealing methods, the patented designs of the seats and stem packing in the steam series ball valves resist the erosive nature of steam, thus improving performance and enhancing safety.

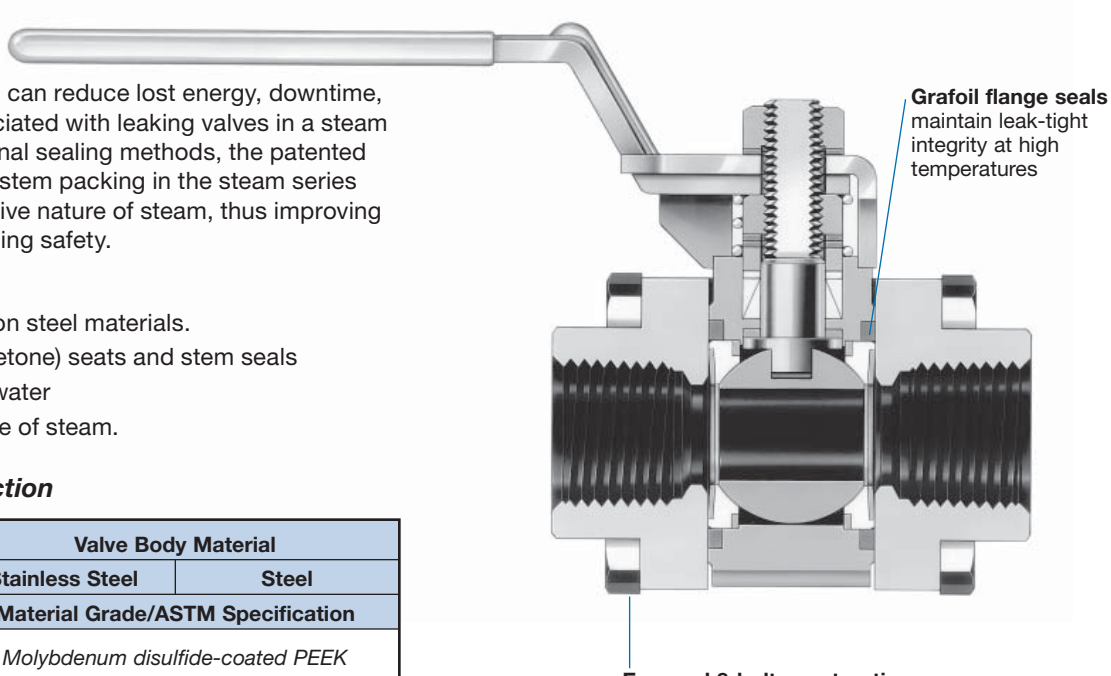

Features

- Stainless steel or carbon steel materials.
- PEEK (polyetheretherketone) seats and stem seals
  - resist absorption of water
  - resist erosive damage of steam.

Materials of Construction

Component	Valve Body Material	
	Stainless Steel	Steel
	Material Grade/ASTM Specification	
Packings, stem bearing, seats (2)	*Molybdenum disulfide-coated PEEK*	
Back sheets (2)	*S62P, S65P, S67P, S68P series—Grafoil; S63P series—N/A*	
Flange seals (2)	*Grafoil with 316 SS*①	
Body fasteners (8)	Grade B8M class 2/ A193	Zinc phosphate-coated grade B7/A193
Lubricant	*PTFE-based*	

Wetted components listed in *italics*.

All other components same as shown on page 4.

① S62P and S65P series—impregnated with hydrocarbon-based lubricant; RTV silicone sealant. S63P series—contains no 316 SS.

Saturated Steam Ratings

Stainless Steel Valves

1050 psig at 550°F (72.3 bar at 287°C)

Carbon Steel Valves

680 psig at 500°F (46.8 bar at 260°C)

Ordering Information

To order, insert **S** before the series designator and replace **T** with **P.**

Example: SS-**S**62**P**S4

To order steel valve body material, replace **SS** with **S.**

Example: **S**-S62PS4

Pressure-Temperature Ratings

Series	62	63, 65	67, 68	62, 63, 65	67, 68
Material	Stainless Steel			Steel	
Temperature, °F (°C)	Working Pressure, psig (bar)				
–20 (–28) to 100 (37)	2500 (172)	2500 (172)	2000 (137)	2500 (172)	2000 (137)
150 (65)	2420 (166)	2320 (159)	1920 (132)	2250 (155)	1820 (125)
200 (93)	2350 (161)	2150 (148)	1830 (126)	2010 (138)	1650 (113)
250 (121)	2280 (157)	1980 (136)	1750 (120)	1770 (121)	1480 (101)
300 (148)	2200 (151)	1910 (131)	1670 (115)	1520 (104)	1310 (90.2)
350 (176)	2120 (146)	1840 (126)	1600 (110)	1280 (88.1)	1140 (78.5)
400 (204)	2050 (141)	1770 (121)	1530 (105)	1040 (71.6)	970 (66.8)
450 (232)	1980 (136)	1700 (117)	1460 (100)	800 (55.1)	800 (55.1)
500 (260)	1910 (131)	1660 (114)	1410 (97.1)	710 (48.9)	710 (48.9)
550 (287)	1100 (75.7)	1100 (75.7)	1100 (75.7)	620 (42.7)	620 (42.7)
600 (315)	200 (13.7)	200 (13.7)	200 (13.7)	200 (13.7)	200 (13.7)

Steel valves with Swagelok tube fitting end connections: 375°F (190°C) max.

Seal Kits

Seal kits contain stem springs, gland, packing support, packings, stem bearing, seats, seat springs, back sheets, flange seals, lubricant, sealant, and instructions.

Kit components are the same materials and grades listed in **Materials of Construction.**

Select a kit ordering number.

Valve Series	Kit Ordering Number
S62P	SS-91K-S62P
S63P	SS-91K-S63P
S65P	SS-91K-S65P
S67P	SS-91K-S67P
S68P	SS-91K-S68P

Thermal Service (T60M Series)

The Swagelok thermal service ball valve, with its unique, spring-like metal seat, is designed to maintain a seal with a minimum seat load against the ball.

Features

- 316 SS or carbon steel material with Grafoil packing and alloy X-750 seats
- Resists contamination of the thermal liquid.
- Enhances safety in thermal liquid systems.
- Meets or exceeds FCI 70-2 Class VI for leak-tight shutoff.
- Exceeds performance requirements of Fire Test Standard API 607, 4th edition.

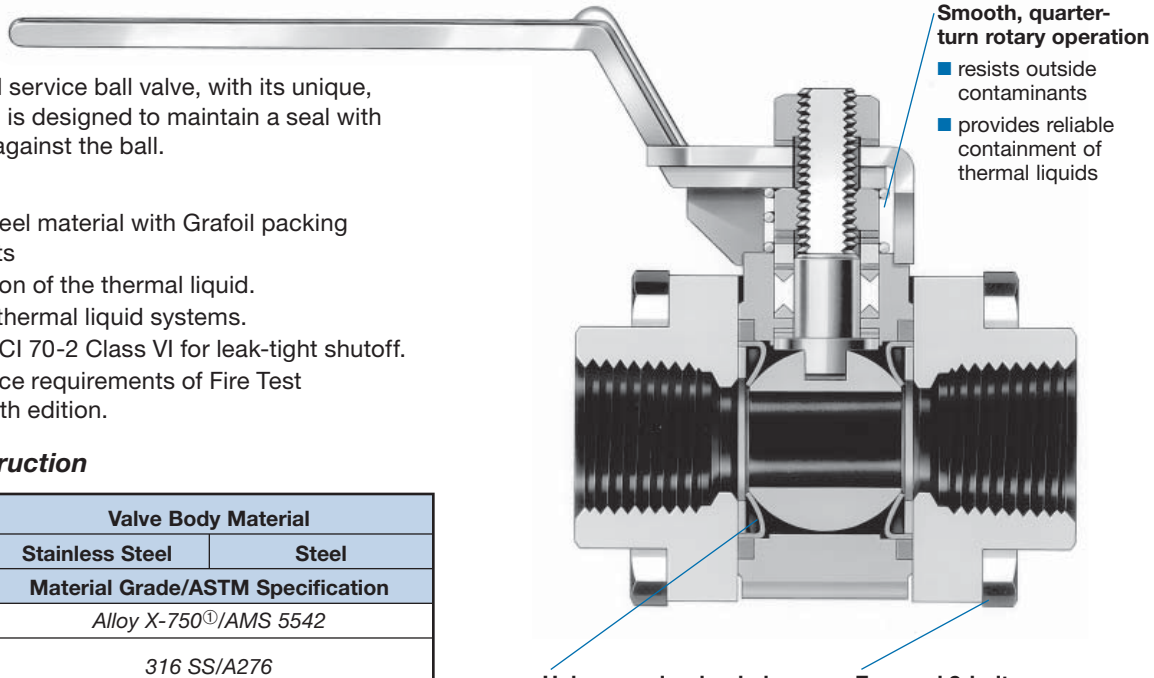

Smooth, quarter-turn rotary operation

- resists outside contaminants
- provides reliable containment of thermal liquids

Unique, spring-loaded metal seats

- provide positive leak-tight sealing at temperatures up to 850°F (454°C)
- work equally well in low- and high-pressure systems.

Encased 8-bolt construction

resists differential thermal expansion of body components during rapid temperature cycling

Materials of Construction

Component	Valve Body Material	
	Stainless Steel	Steel
	Material Grade/ASTM Specification	
Packing bearing	*Alloy X-750①/AMS 5542*	
Packing supports (2), back seats (2)	*316 SS/A276*	
Packing,② flange seals (2)③	*Grafoil with 316 SS*	
Ball	*S17400 SS①/A564*	
Seats	*Alloy X-750①/AMS 5542*	
Body fasteners (8)	Grade B8M class 2/ A193	Zinc phosphate-coated grade B7/A193
Lubricant	*Fluorinated tungsten disulfide*	

Wetted components listed in *italics.*

All other components same as shown on page 4.

① Coated with molybdenum disulfide with hydrocarbon binder.

② Impregnated with fluorocarbon-based lubricant.

③ Impregnated with anaerobic adhesive. T63M and T65M series—RTV silicone sealant.

Pressure-Temperature Ratings

Series	63, 65	67, 68	63, 65	67, 68
Material	Stainless Steel		Steel	
Temperature, °F (°C)	Working Pressure, psig (bar)			
–65 (–53) to 400 (204)	1000 (68.9)	500 (34.4)	1000 (68.9)	500 (34.4)
450 (232)	1000 (68.9)	500 (34.4)	800 (55.1)	500 (34.4)
500 (260)	1000 (68.9)	500 (34.4)	710 (48.9)	500 (34.4)
550 (287)	1000 (68.9)	500 (34.4)	620 (42.7)	500 (34.4)
600 (315)	1000 (68.9)	500 (34.4)	540 (37.2)	500 (34.4)
650 (343)	1000 (68.9)	500 (34.4)	450 (31.0)	450 (31.0)
700 (371)	1000 (68.9)	500 (34.4)	370 (25.4)	370 (25.4)
750 (398)	1000 (68.9)	500 (34.4)	280 (19.2)	280 (19.2)
800 (426)	1000 (68.9)	500 (34.4)	200 (13.7)	200 (13.7)
850 (454)	1000 (68.9)	500 (34.4)	—	—

Steel valve ratings limited to –20°F (–28°C).

Steel valves with Swagelok tube fitting end connections: 375°F (190°C) max.

Testing

All thermal service ball valves are tested with pure nitrogen at 50 psig (3.4 bar) for leak-tight integrity of the ball seats as specified by FCI 70-2 Class VI. Stem packing and body seals are tested for no visible leakage using a liquid leak detector.

Valve Series	Maximum Allowable Seat Leak Rate std cm^3/min
T63M, T65M	0.15
T67M	0.30
T68M	0.45

Ordering Information

Thermal series ball valves are available in 63, 65, 67, and 68 series sizes. To order, insert **T** before the series designator and replace the second **T** with **M.**

Example: SS-**T**63**M**S8

To order steel valve body material, replace **SS** with **S.**

Example: **S**-T63MS8

Seal Kits

Seal kits contain ball, seats, packing, flange seals, stem bearings, back seats, packing supports, stem springs, lubricant, sealant, and instructions.

Kit components are the same materials and grades listed in **Materials of Construction.**

Select a kit ordering number.

Valve Series	Kit Ordering Number
T63M	SS-91K-T63M
T65M	SS-91K-T65M
T67M	SS-91K-T67M
T68M	SS-91K-T68M

Fire Series (A60T Series)

Fire series ball valves meet fire test specification API Standard 607, 4th edition.

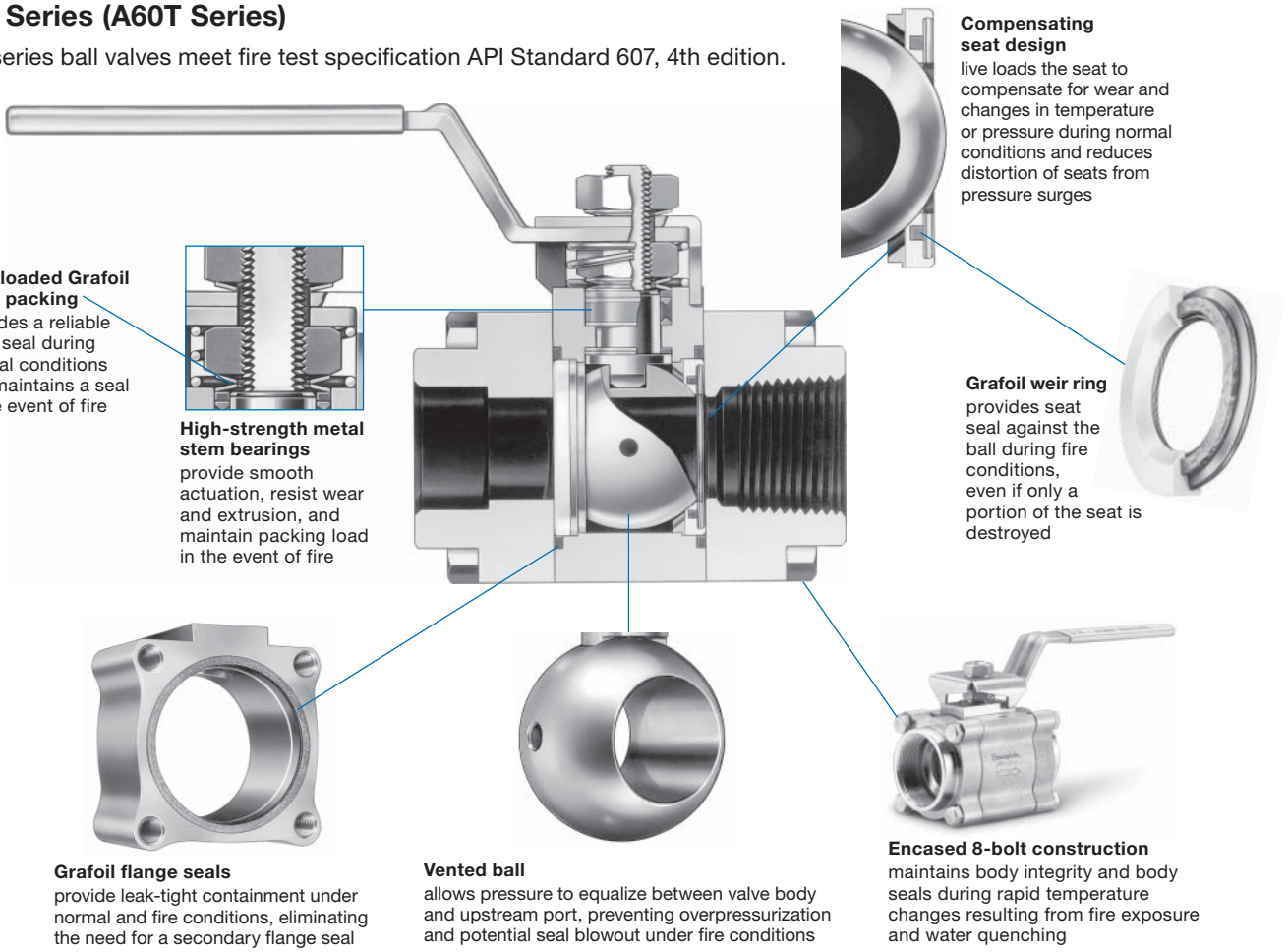

Compensating seat design
live loads the seat to compensate for wear and changes in temperature or pressure during normal conditions and reduces distortion of seats from pressure surges

Live-loaded Grafoil stem packing
provides a reliable stem seal during normal conditions and maintains a seal in the event of fire

High-strength metal stem bearings
provide smooth actuation, resist wear and extrusion, and maintain packing load in the event of fire

Grafoil weir ring
provides seat seal against the ball during fire conditions, even if only a portion of the seat is destroyed

Grafoil flange seals
provide leak-tight containment under normal and fire conditions, eliminating the need for a secondary flange seal

Vented ball
allows pressure to equalize between valve body and upstream port, preventing overpressurization and potential seal blowout under fire conditions

Encased 8-bolt construction
maintains body integrity and body seals during rapid temperature changes resulting from fire exposure and water quenching

Materials of Construction

Component	Valve Body Material	
	Stainless Steel	Steel
	Material Grade/ASTM Specification	
Packing supports (2)	Polyimide	
*Packing, flange seals (2)*①	*Grafoil with 316 SS wire*	
Seats with integral weir rings (2)	*Glass-filled reinforced PTFE; Grafoil with 316 SS wire*	
Coned-disc springs (2)	*Grafoil-lined 316 SS/A167*	
Body fasteners (8)	Grade B8M class 2/ A193	Zinc phosphate-coated grade B7/A193
Lubricants	*Fluorinated tungsten disulfide; molybdenum with hydrocarbon binder; nickel antiseize in hydrocarbon carrier*	

Wetted components listed in *italics*.
All other components same as shown on page 4.
① RTV silicone sealant on flange seals.

Testing

In addition to the requirements given in **Testing,** page 5, fire series ball valves meet those of API Standard 607, 4th edition, and Swagelok fire test specification SEI-00334. See the Swagelok *Fire Series Ball Valves—A60T Series* catalog, MS-02-47, for more details.

Pressure-Temperature Ratings

Series	63, 65	67, 68
Material Name	Stainless Steel, Steel	
Temperature °F (°C)	Working Pressure, psig (bar)	
–40 (–40) to 100 (37)	2200 (151)	2000 (137)
150 (65)	1600 (110)	1600 (110)
200 (93)	1000 (68.9)	1000 (68.9)
250 (121)	400 (27.5)	400 (27.5)
300 (148)	300 (20.6)	300 (20.6)
350 (176)	200 (13.7)	200 (13.7)
400 (204)	100 (6.8)	100 (6.8)

Steel valve ratings limited to –20°F (–28°C).
Steel valves with Swagelok tube fitting end connections: 375°F (190°C) max.

Ordering Information

Fire series ball valves are available in 63, 65, 67, and 68 series sizes. To order, insert **A** in the ordering number.

Example: SS-**A**63**T**S8

To order steel valve body material, replace **SS** with **S.**

Example: **S**-A63TS8

Seal Kits

Seal kits contain stem springs, gland, packing, packing supports, stem bearings, seats with integral weir rings, seat springs, flange seals, and instructions.

Select a kit ordering number.

Valve Series	Kit Ordering Number
A63T	SS-91K-A63T
A65T	SS-91K-A65T
A67T	SS-91K-A67T
A68T	SS-91K-A68T

Chlorine Series (C60V Series)

Features

- Materials include carbon steel valve body with virgin PTFE seats and packing, in accordance with the guidelines of the Chlorine Institute Pamphlet 6, *Piping Systems for Dry Chlorine.*
- Upstream ball vent prevents overpressurization in ball and body when valve is closed.

Pressure-Temperature Ratings

300 psig at –20 to 250°F (20.6 bar at –28 to 121°C).

Cleaning and Packaging

C60V series valve bodies and flanges are cleaned in mineral spirits followed by an aqueous cleaning solution containing a surfactant. All other wetted components are cleaned in accordance with Swagelok *Special Cleaning and Packaging (SC-11),* MS-06-63.

C60V series ball valves are capped and sealed individually in desiccant packaging and are tagged for chlorine service.

Testing

Every chlorine series valve is factory tested with nitrogen at 300 psig (20.6 bar). Seats have a maximum allowable leak rate of 0.04 std cm^3/min.

Shell testing with gas at 300 psig (20.6 bar) is performed on 62, 63, and 65 chlorine series valves.

Shell testing with gas at 1.5 times the maximum working pressure is performed on 67 and 68 chlorine series valves.

Ordering Information

Select an ordering number from the **Dimensions** tables for Swagelok tube fitting, female NPT, or tube and pipe socket weld end connections. Insert **C** before the series designator. Replace **SS** and **T** with **S** and **V,** respectively.

Example: **S**-**C**62**V**S4

Materials of Construction

Component	Material Grade/ASTM Specification
Lower stem nut	Alloy 400
Packing support	ECTFE
Stem bearing	*ECTFE*
Packing	*Virgin PTFE/ASTM D1710*
Vented ball	*Alloy R-405/B164*
Support rings (2)	*62, 63 series—alloy 400/B127* *65, 67, 68 series—316 SS/A167*
Seats (2)	*Virgin PTFE*
Coned-disc springs (2)	*Alloy X-750/AMS 5542*
Flanges (2)	*WCB/A216*
Body fasteners (4)	Cadmium-plated carbon steel grade 8/ SAE J429
Lubricant	*Fluorinated-based with PTFE*

Wetted components listed in *italics.*
All other components same as shown on page 4.

Seal Kits

Seal kits contain stem springs, gland, packing support, packings, stem bearing, seat subassemblies, flange seals, lubricant, and instructions.

Select a kit ordering number.

Valve Series	Kit Ordering Number
C62V	S-91K-C62V
C63V	S-91K-C63V
C65V	S-91K-C65V
C67V	S-91K-C67V
C68V	S-91K-C68V

All-Welded Valves (W60T Series)

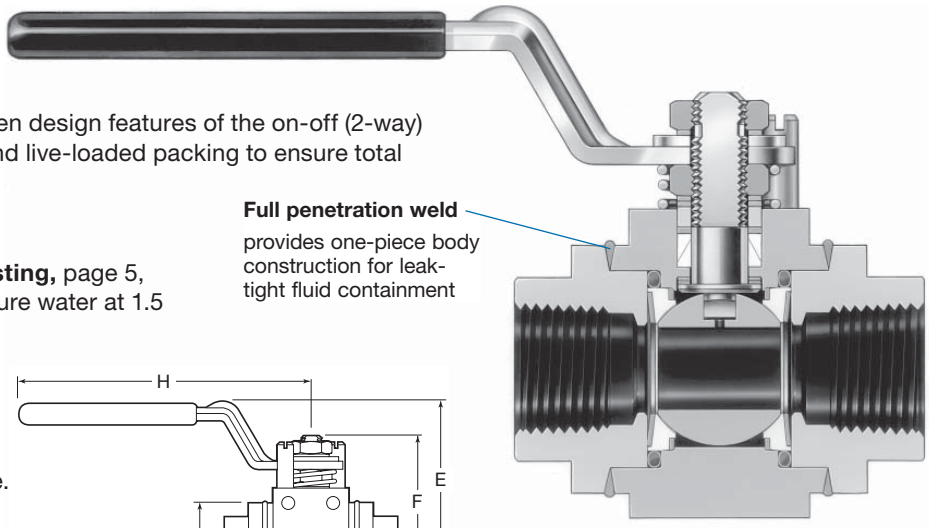

Features

All-welded ball valves incorporate the proven design features of the on-off (2-way) ball valve, all-welded body construction, and live-loaded packing to ensure total system fluid containment.

Testing

In addition to the requirements given in **Testing,** page 5, a hydrostatic shell test is performed with pure water at 1.5 times the working pressure.

Dimensions and Ordering Information

Dimensions, in inches and (millimeters), are for reference only and are subject to change.

Select an ordering number.

To order other seat materials, replace **T** with **C** for carbon/glass PTFE, **E** for UHMWPE, or **V** for virgin PTFE.

Example: SS-W63**C**F8

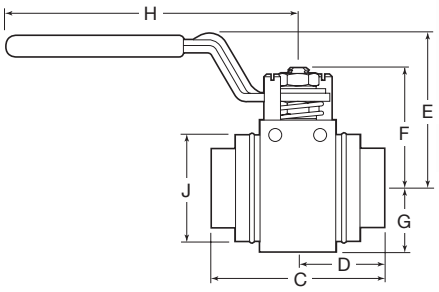

Size	Ordering Number	Orifice in. (mm)	C_v	Dimensions, in. (mm)						
				C	D	E	F	G	H	J
Female NPT End Connections										
1/2 in.	SS-W63TF8	0.516 (13.1)	12	2.69 (68.3)	1.34 (34.0)	2.32 (58.9)	1.79 (45.5)	0.96 (24.4)	4.50 (114)	1.60 (40.6)
1 in.	SS-W65TF16	0.875 (22.2)	38	3.59 (91.2)	1.79 (45.5)	2.93 (74.4)	2.52 (64.0)	1.26 (32.0)	6.00 (152)	2.24 (56.9)

Valves for Low-Temperature Service (L60 Series)

Features

- Temperature rating –65 to 250°F (–53 to 121°C).
- Available in 2-way and 3-way 62, 63, and 65 series sizes in stainless steel and in 2-way 62, 63, and 65 series sizes in brass.
- Available with seat materials shown in the table below.

Materials of Construction

Component	Valve Body Material	
	Stainless Steel	Brass
	Material	
Stem bearing	*Molybdenum disulfide-coated PEEK*	
Flange seals	*Buna C*	
Body fasteners (4)	316 SS gr B8M cl 2/A193	
Body hex nuts (8 or 4)	316 SS gr 8M str hd/A194	

Wetted components listed in *italics*.
All other components same as shown on page 4.

Ordering Information

To order, insert **L** in the ordering number.

Examples: SS-**L**62TS4
SS-**L**62XTS4

Seal Kits

Seal kit components are the same materials and grades listed in **Materials of Construction.**

See **Seal Kits,** page 21, for ordering information.

Pressure-Temperature Ratings

Temperature, °F (°C)	Seat Material	Valve Body Material					
		Stainless Steel				Brass	
		Reinforced PTFE	Carbon/ Glass PTFE	Polyethylene	Virgin PTFE	Reinforced PTFE, Carbon/ Glass PTFE, Polyethylene	Virgin PTFE
	Valve Series	Working Pressure, psig (bar)					
On-Off (2-Way)							
–65 (–53) to 100 (37)	62	2200 (151)	2500 (172)	3000 (206)	1500 (103)	2000 (137)	1500 (103)
	63	2200 (151)	2500 (172)	2500 (172)	1500 (103)	1500 (103)	1500 (103)
	65	2200 (151)	2500 (172)	2500 (172)	1500 (103)	1500 (103)	1500 (103)
Switching (3-Way)							
–65 (–53) to 100 (37)	62, 63, 65	1000 (68.9)	1000 (68.9)	1000 (68.9)	1000 (68.9)	—	—

See **Pressure-Temperature Ratings,** page 6, for ratings from 100 to 250°F (37 to 121°C).

Valves for Rapid-Cycle Service (R60T Series)

The quad seal-packed ball valve may be more effective in applications requiring rapid cycling of a valve or-when packing adjustments may be difficult.

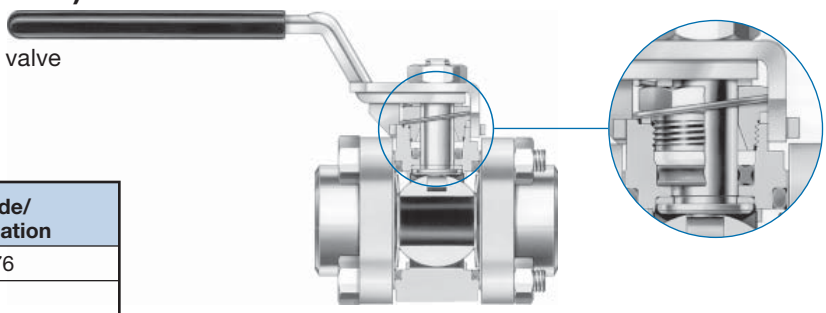

Materials of Construction

Component	Material Grade/ ASTM Specification
Packing bolt①, spacer ring	316 SS/A276
Top quad-seal support	PEEK
Stem bearing	*PEEK*
Lower quad-seal support	Reinforced PTFE
Flange seal, stem quad seal	*Fluorocarbon FKM*

Wetted components listed in *italics*.
All other components same as shown on page 4.
① Coated with molybdenum disulfide with hydrocarbon binder.

Pressure-Temperature Ratings

Valve Series	Pressure Rating at 0 to 100°F (–17 to 37°C)	Pressure Rating at 400°F (204°C)
R62T, R63T, R65T	2200 psig (151 bar)	330 psig (22.7 bar)
R67T, R68T	1500 psig (103 bar)	

Ordering Information

To order, insert **R** before the series designator in the valve ordering number.

Example: SS-**R**63TS8

Seal Kits

Seal kits contain stem spring, quad seal supports, spacer ring, stem quad seal, stem bearing, seats, seat springs, flange seals, lubricant, and instructions.

Kit components are the same materials and grades listed in **Materials of Construction.**

Select a kit ordering number.

Valve Series	Kit Ordering Number
R62T	SS-91K-R62T
R63T	SS-91K-R63T
R65T	SS-91K-R65T
R67T	SS-91K-R67T
R68T	SS-91K-R68T

Options and Accessories

Handles

Locking Lever Bracket Handle

Oval Handle

A variety of handle options is available for use with 60 series ball valves. To order a locking lever bracket handle, add **-JL** to the ordering number. To order an oval handle, add **-JK** to the ordering number. For additional information and dimensions, see the Swagelok *Process Ball Valves Handle Options* catalog, MS-01-137.

Vented Valves

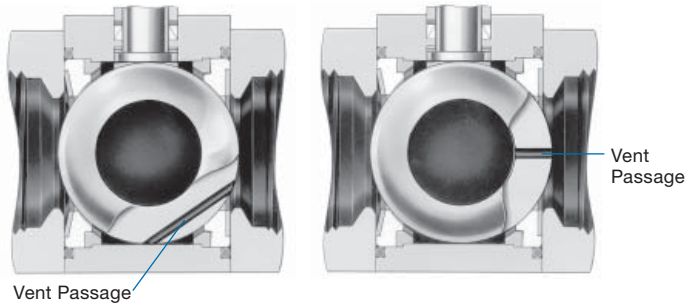

External Vent Option

Internal Vent Option

On-off (2-way) ball valves are available with either an internal or an external vent. These vents are available for either upstream or downstream service. For details and ordering information, see the Swagelok *Process Ball Valve Vent Options* catalog, MS-02-28.

Low Dead Space Inserts

- Reduce fluid entrapment around the ball, stem, and seats while the valve is in the open or closed position.
- For use in select ball valves; not for use on steam, thermal, or fire series valves.
- Made from carbon/glass reinforced PTFE.

To order, add **-LD** to the valve ordering number.

Examples: SS-62TS4**-LD;** SS-62XTS4-F8**-LD**

Kits for Field Assembly

Select an ordering number.

Valve Series	Kit Ordering Numbers	
	Low Temperature	All Other
On-Off (2-Way)		
62	TGC-91K-L62-LD	TGC-91K-62-LD
63	TGC-91K-L63-LD	TGC-91K-63-LD
65	TGC-91K-L65-LD	TGC-91K-65-LD
67	TGC-91K-L67-LD	TGC-91K-67-LD
68	TGC-91K-L68-LD	TGC-91K-68-LD
Switching (3-Way)		
62	TGC-91K-L62X-LD	TGC-91K-62X-LD
63	TGC-91K-L63X-LD	TGC-91K-63X-LD
65	TGC-91K-L65X-LD	TGC-91K-65X-LD
67	TGC-91K-L67X-LD	TGC-91K-67X-LD
68	TGC-91K-L68X-LD	TGC-91K-68X-LD

Panel Mount Kit

- Allows vertical or horizontal mounting.
- Can be installed on panels up to 3/16 in. (4.8 mm) for 62 series and 1/4 in. (6.4 mm) thick for 63, 65, 67, and 68 series.
- Fits oval and lever handle.
- Provides template for drilling holes.

Ordering Information

Select an ordering number.

For 4-Bolt Valves Assembled with Carbon Steel or Stainless Steel Bolts

Kit includes self-cinching nut, cover plate, cap screws, panel mount brackets, two stainless and two carbon steel bolts, and instructions.

Valve Series	Kit Ordering Number
62	MS-PMK-62
63	MS-PMK-63
65	MS-PMK-65
67	MS-PMK-67
68	MS-PMK-68

For 4-Bolt Valves Assembled with Stainless Steel Studs and All 8-Bolt Valves

Kit includes self-cinching nut, cover plate, cap screws, panel mount brackets, and instructions.

Valve Series	Kit Ordering Number
62	MS-PMK-S62
63	MS-PMK-S63
65	MS-PMK-S65
67	MS-PMK-S67
68	MS-PMK-S68

Options and Accessories

Seal Kits

The swing-out design of 4-bolt valves allows fast and easy maintenance with the valve in-line.

Kits contain:

- gland
- packing support
- packings
- stem bearings
- stem springs (not included in 62 series seal kits)
- seat subassemblies
- flange seals
- ball (alloy X-750 seal kit only)
- lubricant appropriate to seat material, shown on page 4
- instructions.

To order a seal kit for a stainless steel or steel valve, add a seat material designator to the basic ordering number.

Example: SS-91K-62**T**

To order a seal kit for a brass valve, replace **SS** with **B.**

Example: **B**-91K-62T

To order a seal kit for a low-temperature service valves, insert **L** before the series designator.

Example: SS-91K-**L**62T

Valve Series	Basic Ordering Number	Seat Material Designator
62	SS-91K-62	**T** Reinforced PTFE **M** Alloy X-750 **C** Carbon/glass reinforced PTFE **P** PEEK **E** UHMWPE **V** Virgin PTFE
63	SS-91K-63	
65	SS-91K-65	
67	SS-91K-67	
68	SS-91K-68	

Fastener Kits

Each 4-bolt valve kit contains stem nuts, body fasteners, and body nuts. Select an ordering number.

Valve Series	Valve Body Material	
	Stainless Steel	Brass, Steel
	Fastener Kit Ordering Number	
62	316-61K-62	S-61K-62
63	316-61K-63	S-61K-63
65	316-61K-65	S-61K-65
67	316-61K-67	S-61K-67
68	316-61K-68	S-61K-68

Flange Seal Kits

Each 4-bolt valve kit contains two flange seals, lubricant, and instructions. To order, insert a material designator and a uniform size number to the basic ordering number.

Example: **VA70**-91K-**121**

Material Designator	Temperature Range °F (°C)	Basic Ordering Number	Standard Flange Seal Uniform Size Number
VA70 Fluorocarbon FKM	– 20 to 450 (– 28 to 232)	-91K-	**017** 62 series **121** 63 series **129** 65 series **141** 67 series **147** 68 series
BN70 Buna N① **EP70** Ethylene propylene **NE70** Neoprene	– 20 to 250 (– 28 to 121)		
BC70 Buna MS 28775	– 65 to 250 (– 53 to 121)		
T PTFE	50 to 150 (10 to 65)		

① 62, 63, and 65 series valves only.

Actuator Options

Position Indicators

display visual status of a valve. To order, contact your authorized Swagelok representative.

Electropneumatic Actuation

adds a solenoid valve to the pneumatic actuator to allow actuation by an electrical signal. For more information, see the Swagelok *Solenoid Valves for Electropneumatically Actuated Ball Valves* catalog, MS-02-41.

ISO 5211-Compliant Actuator

mounting bracket kits are available. For more information, see the Swagelok *Actuated Ball Valve Selection Guide*, MS-02-136.

Limit Switches

indicate actuator position by means of an electrical signal. They meet various NEMA ratings such as NEMA4 (weatherproof) and NEMA7 (explosion proof). For more information, see the Swagelok *Limit Switches* catalog, MS-06-39.

Electric Actuators

are rugged and lightweight, and connect alternating- or direct-current power sources. For more information, see the Swagelok *Electric Actuators—141 and 142 Series* catalog, MS-01-35.

Rack and Pinion Pneumatic Actuators

Table 1—Actuator Pressure Required at System Pressure

Valve Series	Flow Pattern	Seat Material Designator	System Pressure psig (bar)	Spring Return		Double Acting		Actuator Series
				Single	Dual	Single	Dual	
				Minimum Actuator Pressure, psig (bar)				
62	2-way	C, E, T, V	Maximum valve rating	70 (4.9)	—	30 (2.1)	60 (4.2)	131
					75 (5.2)	15 (1.1)	20 (1.4)	133
		P	1050 (72.3)	70 (4.9)	—	50 (3.5)	85 (5.9)	131
			1500 (103)	—	—	55 (3.8)	100 (6.9)	131
			2500 (172)			65 (4.5)	—	131
			1050 (72.3)	70 (4.9)	80 (5.6)	20 (1.4)	35 (2.5)	133
			2500 (172)	80 (5.6)	90 (6.3)	25 (1.8)	45 (3.2)	133
	3-way	C, E, T, V	Maximum valve rating	70 (4.9)	—	30 (2.1)	60 (4.2)	151
				75 (5.2)	80 (5.6)	15 (1.1)	20 (1.4)	153
		P		—	—	50 (3.5)	85 (5.9)	151
				65 (4.5)	75 (5.2)	20 (1.4)	35 (2.5)	153
63	2-way	C, E, T, V	Maximum valve rating	—	—	70 (4.9)	—	131
				80 (5.6)		40 (2.8)	70 (4.9)	133
		M		—		90 (6.3)	—	133
		P	1050 (72.3)	—		100 (6.9)	—	131
				80 (5.6)		35 (2.5)	60 (4.2)	133
			1500 (103)	85 (5.9)		45 (3.2)	75 (5.2)	133
			2000 (137)	95 (6.6)		55 (3.8)	100 (6.9)	133
			2500 (172)	—		70 (4.9)	—	133
		T (fire)	Maximum valve rating	70 (4.9)		—	—	133
	3-way	C, E, T, V		—		95 (6.6)	—	151
				80 (5.6)		40 (2.8)	70 (4.9)	153
		P		—		100 (6.9)	—	151
						85 (5.9)		151
				80 (5.6)		30 (2.1)	60 (4.2)	153
65	2-way	C, E, T, V	Maximum valve rating	100 (6.9)	—	70 (4.9)	—	133
				65 (4.5)	80 (5.6)	30 (2.1)	45 (3.2)	135
		M		—	—	60 (4.2)	—	135
		P	1050 (72.3)	95 (6.6)	—	50 (3.5)	90 (6.3)	133
			1500 (103)	—		85 (5.9)	—	133
			1050 (72.3)	65 (4.5)	80 (5.6)	25 (1.8)	40 (2.8)	135
			1500 (103)	75 (5.2)	—	35 (2.5)	60 (4.2)	135
			2500 (172)	80 (5.6)		50 (3.5)	90 (6.3)	135
		T (fire)	Maximum	70 (4.9)		—	—	135
	3-way	C, E, T, V	Maximum valve rating	—		70 (4.9)	—	153
				80 (5.6)		30 (2.1)	45 (3.2)	155
		P		—		50 (3.5)	90 (6.3)	153
				75 (5.2)	85 (5.9)	20 (1.4)	30 (2.1)	155
67	2-way	C, E, T, V	Maximum valve rating	70 (4.9)	—	35 (2.5)	60 (4.2)	135
		M		—		80 (5.6)	—	135
		P	1050 (72.3)	80 (5.6)		45 (3.2)	70 (4.9)	135
			1500 (103)	90 (6.3)		60 (4.2)	100 (6.9)	135
			2000 (137)	—		75 (5.2)	—	135
		T (fire)	Maximum valve rating	80 (5.6)		—	—	135
	3-way	C, E, T, V		85 (5.9)		35 (2.5)	60 (4.2)	155
		P		60 (4.2)		35 (2.5)	65 (4.5)	155
68	2-way	C, E, T, V	Maximum valve rating	80 (5.6)	—	55 (3.8)	90 (6.3)	135
		M		—		100 (6.9)	—	135
		P	1050 (72.3)	90 (6.3)		60 (4.2)	100 (6.9)	135
			1500 (103)	—		75 (5.2)	—	135
			2000 (137)			90 (6.3)	—	135
		T (fire)	Maximum valve rating	90 (6.3)		—	—	135
	3-way	C, E, T, V		90 (6.3)		55 (3.8)	90 (6.3)	155
		P		—		55 (3.8)	100 (6.9)	155

Required actuator pressures are based on valve performance using pressurized air or nitrogen.

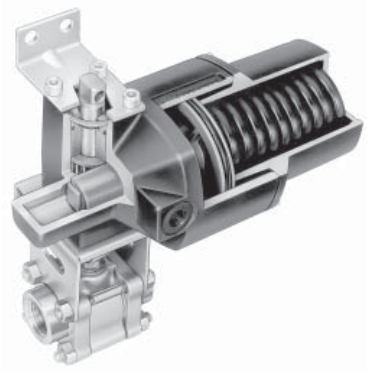

90° Actuation (130 Series)
180° Actuation (150 Series)

Swagelok rack and pinion pneumatic actuators are compact, lightweight, easily mountable, and can be operated with standard shop air.

Low-pressure spring-return actuators for applications with lower-pressure air are available. Contact your authorized Swagelok representative.

Features

- 90° actuation for 2-way flow patterns.
- 180° actuation for 3-way flow patterns.
- Urethane finish on body and cap.
- Factory tested for proper operation.

Technical Data

For technical data, including pressure-temperature ratings and materials of construction, see the *Rack and Pinion Pneumatic Actuators for Swagelok Ball Valves—130 and 150 Series* catalog, MS-06-87.

Ordering Information

For Field Assembly

1. From Table 1, select the actuator series that corresponds with your valve series, flow pattern, seat material, system pressure, and minimum actuator pressure.

   Example: **133**

2. Find this actuator series number in Table 2, confirm the valve series and type, and select the actuator ordering number and mounting bracket kit ordering number.

   Example: **MS-133-DA** and **MS-MB-63**

3. For dual-mounted valves (two valves mounted to one actuator), order two mounting bracket kits.

⚠ **Caution: Actuated assemblies must be properly aligned and supported. Inadequate alignment or improper support of the actuated assembly may result in leakage or premature valve failure.**

Factory Assemblies

1. Select a valve from the catalog.

   Example: **SS-62TS4**

2. Find the valve series (62), type (2-way), and seat material designator (T) in Table 1.

3. Confirm minimum actuator pressure needed to drive actuator and actuator type (spring return or double acting).

   Example: 30 psig (2.1 bar) pressure is required to drive a double-acting actuator. Select actuator model **131.**

4. See Table 2 and find the actuator model in the first column. Confirm the valve series and flow pattern or valve type, and find the factory assemblies actuator designator in the last column.

   Example: **31D**

5. Add this designator to complete the ordering number.

   Example: SS-62TS4**-31D**

6. For dual-mounted valves, (two valves mounted to one actuator), add **DM** to the ordering number.

   Example: SS-62TS4-31D**DM**

Factory-assembled valves with UHMWPE seats and packing are assembled with nonfluorocarbon pneumatic actuators (designator **-NF**).

For ISO 5211-compliant actuators, see the Swagelok *ISO 5211-Compliant Actuators* catalog, MS-02-337.

Table 2—Actuator Ordering Numbers

Actuator Model	Valve Series	Flow Pattern or Valve Type	Actuators for Field Assembly			Factory Assemblies		
			Spring Return	Double Acting	Mounting Bracket Kit Ordering Number	Spring Return		Double Acting
			Actutator Ordering Number			Normally Closed	Normally Open	
						Actuator Designator		
131 or 151	62	2-way	MS-131-SR	MS-131-DA	MS-MB-62	-31C	-31O	-31D
		3-way	MS-151-SR	MS-151-DA	MS-MB-62	-51S	-51S	-51D
		Steam	MS-131-SR-HT	MS-131-DA-HT	MS-MB-S62	-31CHT	-31OHT	-31DHT
	63	2-way	MS-131-SR	MS-131-DA	MS-MB-63-131	—	—	-31D
		3-way	—	MS-151-DA	MS-MB-63-131	—	—	-51D
		All welded	MS-131-SR	MS-131-DA	MS-MB-73-131	-31C	-31O	-31D
		Steam	—	MS-131-DA-HT	MS-MB-63-131	—	—	-31DHT
133 or 153	62	2-way	MS-133-SR	MS-133-DA	MS-MB-62-133	-33C	-33O	-33D
		3-way	MS-153-SR	MS-153-DA	MS-MB-62-133	-53S	-53S	-53D
		Steam	MS-133-SR-HT	MS-133-DA-HT	MS-MB-S62-133	-33CHT	-33OHT	-33DHT
	63	2-way	MS-133-SR	MS-133-DA	MS-MB-63	-33C	-33O	-33D
		3-way	MS-153-SR	MS-153-DA	MS-MB-63	-53S	-53S	-53D
		All welded	MS-133-SR	MS-133-DA	MS-MB-73-133	-33C	-33O	-33D
		Fire①	MS-133-SR-FP	—	MS-MB-63	-33CFP	—	—
		Steam	MS-133-SR-HT	MS-133-DA-HT	MS-MB-63	-33CHT	-33OHT	-33DHT
		Thermal	—	MS-133-DA-HT	MS-MB-63	—	—	-33DHT
	65	2-way	MS-133-SR	MS-133-DA	MS-MB-65	-33C	-33O	-33D
		3-way	MS-153-SR	MS-153-DA	MS-MB-65	—	—	-53D
		All welded	MS-133-SR	MS-133-DA	MS-MB-75-133	-33C	-33O	-33D
		Steam	MS-133-SR-HT	MS-133-DA-HT	MS-MB-65	-33CHT	-33OHT	-33DHT
		Thermal	—	MS-133-DA-HT	MS-MB-65	—	—	-33DHT
135 or 155	65	2-way	MS-135-SR	MS-135-DA	MS-MB-65-135	-35C	-35O	-35D
		3-way	MS-155-SR	MS-155-DA	MS-MB-65-135	-55S	-55S	-55D
		All welded	MS-135-SR	MS-135-DA	MS-MB-75-135	-35C	-35O	-35D
		Fire①	MS-135-SR-FP	—	MS-MB-65-135	-35CFP	—	—
		Steam	MS-135-SR-HT	MS-135-DA-HT	MS-MB-65-135	-35CHT	-35OHT	-35DHT
		Thermal	—	MS-135-DA-HT	MS-MB-65-135	—	—	-35DHT
	67	2-way	MS-135-SR	MS-135-DA	MS-MB-67	-35C	-35O	-35D
		3-way	MS-155-SR	MS-155-DA	MS-MB-67	-55S	-55S	-55D
		Fire①	MS-135-SR-FP	—	MS-MB-67	-35CFP	—	—
		Steam	MS-135-SR-HT	MS-135-DA-HT	MS-MB-67	-35CHT	-35OHT	-35DHT
		Thermal	—	MS-135-DA-HT	MS-MB-67	—	—	-35DHT
	68	2-way	MS-135-SR	MS-135-DA	MS-MB-68	-35C	-35O	-35D
		3-way	MS-155-SR	MS-155-DA	MS-MB-68	-55S	-55S	-55D
		Fire①	MS-135-SR-FP	—	MS-MB-68	-35CFP	—	—
		Steam	MS-135-SR-HT	MS-135-DA-HT	MS-MB-68	-35CHT	-35OHT	-35DHT
		Thermal	—	MS-135-DA-HT	MS-MB-68	—	—	-35DHT

① Fire series ball valves are assembled to a fail-safe pneumatic actuator that contains a Swagelok fusible plug and a Swagelok mud-dauber fitting. The fusible plug melts if the external temperature reaches 280°F (137°C), relieving pressure in the actuator and allowing the valve to cycle closed.

Rack and Pinion Actuator Dimensions

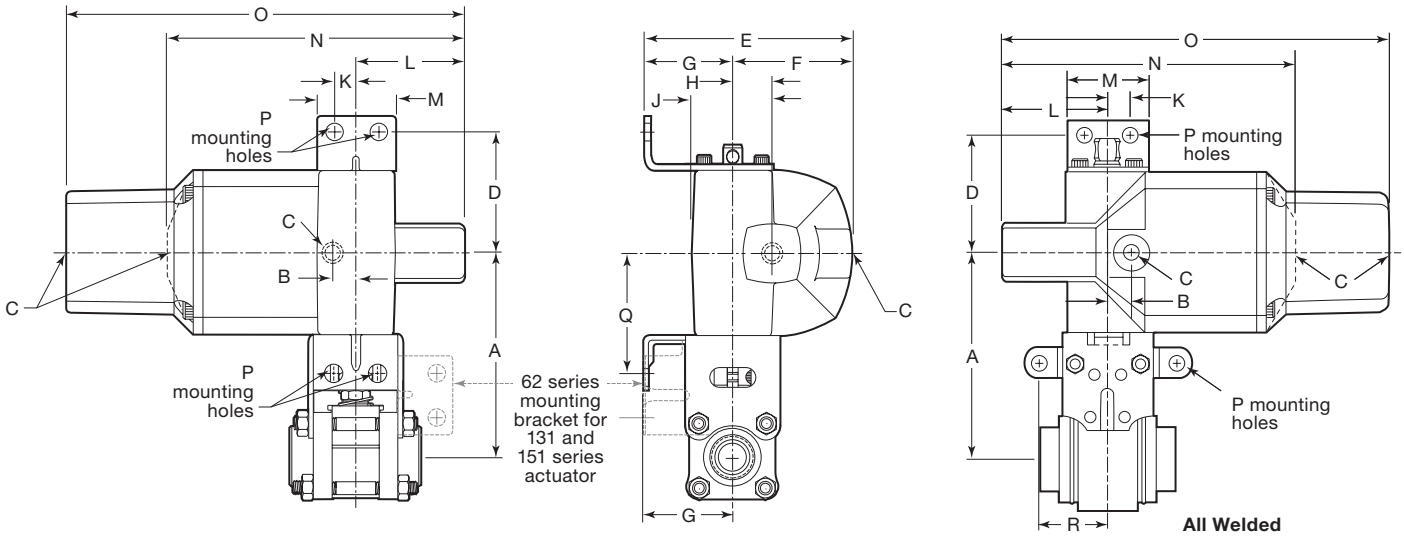

Valve Series	Flow Pattern or Valve Type	Dimensions, in. (mm)																
		A	B	C	D	E	F	G	H	J	K	L	M	N (D)	O (S)	P	Q	R
131 and 151 Series																		
62	2-way, 3-way	3.08 (78.2)	0.34 (8.6)	1/8 in. NPT	1.75 (44.4)	3.04 (77.2)	1.73 (43.9)	1.31 (33.3)	0.60 (15.2)	0.52 (13.2)	0.31 (7.9)	1.46 (37.1)	1.25 (31.8)	4.09 (104)	4.91 (125)	0.34 (8.6)	1.75 (44.4)	—
63	2-way, 3-way	3.55 (90.2)															1.62 (41.1)	—
	All welded	3.62 (91.9)															1.65 (41.9)	1.41 (35.8)
133 and 153 Series																		
62	2-way, 3-way	3.52 (89.4)	0.48 (12.2)	1/8 in. NPT	2.31 (58.7)	4.07 (103)	2.32 (58.9)	1.75 (44.5)	0.75 (19.1)	0.81 (20.6)	0.44 (11.2)	2.16 (54.9)	1.56 (39.6)	5.89 (150)	7.86 (200)	0.34 (8.6)	2.31 (58.7)	—
63	2-way, 3-way	3.95 (100)															2.31 (58.7)	—
	All welded	4.06 (103)															2.09 (53.1)	1.41 (35.8)
65	2-way, 3-way	4.85 (123)															2.31 (58.7)	—
	All welded																2.38 (60.5)	1.72 (43.7)
135 and 155 Series																		
65	2-way, 3-way	6.10 (155)	0.60 (15.2)	1/2 in. NPT	3.06 (77.7)	5.15 (131)	3.27 (83.1)	2.00 (50.8)	0.97 (24.6)	1.22 (31.0)	1.44 (36.6)	3.15 (80.0)	4.00 (102)	8.41 (214)	11.9 (302)	0.53 (13.5)	1.69 (42.9)	—
	All welded																3.47 (88.1)	2.13 (54.1)
67	2-way, 3-way	6.62 (168)															1.69 (42.9)	—
68	2-way, 3-way	6.89 (175)															1.69 (42.9)	—

(D) = double acting; **(S)** = spring return.

Safe Product Selection
When selecting a product, the total system design must be considered to ensure safe, trouble-free performance. Function, material compatibility, adequate ratings, proper installation, operation, and maintenance are the responsibilities of the system designer and user.

Caution: Do not mix or interchange parts with those of other manufacturers.

Warranty Information

Swagelok products are backed by The Swagelok Limited Lifetime Warranty. For a copy, visit swagelok.com or contact your authorized Swagelok representative.

Swagelok, VCO, VCR—TM Swagelok Company
Grafoil—TM UCAR Carbon Company Inc.
© 2001, 2002, 2003, 2004, 2005, 2006, 2007 Swagelok Company
Printed in U.S.A., MI
July 2007, R11
MS-01-146